Coalescing Compressed Air Filters

Balston Microfiber® Filter Assemblies:

Balston Coalescing Compressed Air Filters protect your equipment and delicate instruments from the dirt, water, and oil usually found in compressed air. Balston Coalescing Filters remove these contaminants at a very high efficiency up to 99.99% for 0.01 micron particles and droplets. Liquid releases from the filter cartridge to an automatic drain as rapidly as it enters the filter. This allows a Balston Coalescing Filter to continue removing liquids for an unlimited time without loss of efficiency or flow capacity. Select 1/4" to 2" line filters come with a lifetime (20 year) warranty which guarantees the product against defects and other failures.

Product Features:

- **Remove 99.99% of 0.01 micron particles of oil, water, and dirt from compressed air and other gases**
- **Continuously trap and drain liquids**
- **Service flow ranges from a few SCFM to 40,000 SCFM**
- **Remove trace oil vapor with adsorbent cartridges**
- **Lifetime warranty (20 year) with select 1/4" to 2" line filters**

Compressed Air Systems

Instrumentation and Automated Pnuematic Controls

Pnuematic Tools and Cylinders

Compressed Air Filters

Filter Cartridge and Housing Selection

Filter Cartridge Description	
General purpose applications such as plant compressed air	Single stage filtration. Use a Grade DX filter cartridge
Instrument air and other critical air requirements	Two stage filtration is necessary. Use a Grade DX followed by a Grade BX filter cartridge. As a general rule, a Grade BX filter cartridge should not be used alone.
Removal of trace compressor oil vapor	For rare instances where even a trace amount of oil vapor can cause a problem, three stage filtration is necessary. Use a Grade DX followed by a Grade BX, and a type CI cartridge.

Physical Properties, Microfibre Filter Cartridges	
Temperature Range	-40°F to 300°F (-40°C - 149°C)
Maximum Pressure Differential Across Filter, Inside-to-Outside Flow:	100 psi
Materials of Construction	Borosilicate glass microfibers with fluorocarbon resin binder. Resistant to water, all hydrocarbon and synthetic lubricants.

Retention Efficiency	
Grade	Efficiency for 0.01 Micron Particles and Droplets
DX	93%
BX	99.99%

Balston Filter Cartridges

Balston provides two grades of coalescing filter cartridges, Grade DX and Grade BX. Singly or in tandem, these filters satisfy all requirements for removing liquid and solid contaminants from compressed air. Balston also has an activated carbon adsorbent CI-type cartridge for the removal of trace oil vapors from a compressed air line. The activated carbon cartridge is Grade 000.

How to Select the Filter Cartridge and Housing

1. Decide which grade(s) of filter cartridges fits the application (see selection boxes at left).
2. Select the filter housing with a port size equal to the line size where the filter is to be located.
3. For a new installation in which the line size has yet to be selected, determine the gas flow rate and pressure at the point where the filter will be located, and then refer to the flow chart on the reverse side of this data sheet. NOTE: The filter port size must be equal to or larger than the line size (when specified).

How to Order the Filter Assembly

1. Build your own custom filter assembly using the guideline matrix on Page 16 and specify your model number. Example: 1/2" filter with DPI and Auto Drain with Grade DX Filter = 6004N-01A-DX.
2. Each assembly is shipped with the filter cartridge installed. To order additional filter cartridges, indicate the model number of the cartridges, and the grade. Examples 050-05-DX, 050-05-BX. The grade used for Type CI cartridges is 000 (CI-100-12-000).

Note: Assemblies with CI Cartridges are shipped with the adsorbent cartridge wrapped separately. This shipping method prolongs the life of the cartridge.

Compressed Air Filters

Flow Rates

Filter Housing Model	Port Size	Filter Cartridge Grade	Flow rates (SCFM), at 2 psi drop at indicated line pressure. Refer to Principal Specification Charts in each product data sheet for maximum pressure rating of each housing PSIG										
			2	20	40	80	100	125	150	200	250	400	650
A94A	1/4”	DX	4	9	13	24	29	36	43	55	67	—	—
A914, A914D, A914P		BX	1.2	2.4	4	7	8	9	12	15	17	—	—
2002	1/4”	DX	9	19	30	51	63	76	90	117	145	—	—
2003	3/8”	BX	3	8	11	21	25	31	36	47	58	—	—
2004	1/2”	CI	2	5	7	12	15	18	22	28	35	—	—
2104	1/2”	DX	19	41	65	113	137	166	196	257	316	—	—
		BX	9	19	30	51	63	76	90	117	145	—	—
		CI	6	12	19	32	39	48	56	73	90	—	—
2206	3/4”	DX	37	78	123	214	259	315	371	484	596	—	—
		BX	10	21	34	56	70	85	101	131	162	—	—
		CI	8	16	26	44	53	65	76	99	122	—	—
2208	1”	DX	55	115	181	314	380	463	546	711	877	—	—
		BX	11	23	37	64	77	94	111	144	178	—	—
		CI	10	20	32	56	67	82	96	125	154	—	—
2312	1 1/2”	DX	98	203	319	554	670	816	963	1254	1546	—	—
		BX	22	46	74	129	155	189	223	290	358	—	—
		CI	16	33	52	91	110	134	158	206	253	—	—
A15/80	2”	DX	160	333	525	908	1100	1340	1580	2060	2540	—	—
		BX	45	94	148	256	310	378	445	580	715	—	—
		CI	23	49	77	133	161	197	231	301	371	—	—
	3”	DX	364	760	1190	2060	2500	3045	3600	4680	5770	9030	14480
AKH-0280		BX	90	190	300	510	620	755	890	1160	1430	2240	3590
		CI	47	98	154	266	322	394	462	602	742	1160	1860
	4”	DX	740	1540	2430	4210	5100	6210	7300	9550	11750	18400	29480
AKH-0480		BX	180	380	590	1020	1240	1510	1780	2320	2860	4480	7180
		CI	94	196	308	632	644	780	920	1200	1480	2320	3710
	6”	DX	1500	3120	4910	8500	10300	12550	14800	19300	23700	37120	59460
AKH-0880		BX	360	750	1180	2050	2480	3020	3560	4640	5710	8940	14330
		CI	188	392	616	1064	1280	1560	1840	2390	2950	4620	7400
	8”	DX	2620	5450	8580	14860	18000	21900	25800	33700	41540	65050	104200
AKH-1480		BX	630	1310	2070	3580	4340	5300	6230	8120	10010	15680	25100
		CI	329	686	1078	1860	2250	2740	3230	4210	5190	8130	13020
	10”	DX	4080	8470	13350	23110	28000	34100	40200	52400	64590	101150	162050
AKH-2280		BX	1000	2070	3270	5660	6850	8340	9840	12800	15780	24700	39600
		CI	516	1077	1690	2920	3540	4310	5070	6610	8150	12760	20450

Compressed Air Filters

International ISO Standards

Table taken from ISO8573 - 1

Class	Solid			Water		Oil	
	Maximum Particle Size (micron)	Maximum Concentration ppm	(mg/m³)	Maximum Pressure Dewpoint °F	(°C)	Maximum Concentration ppm	(mg/m³)
1	0.1	.08	(0.1)	-94	(-70)	.008	(0.01)
2	1	.8	(1)	-40	(-40)	.08	(0.1)
3	5	4.2	(5)	-4	(-20)	.83	(1)
4	15	6.7	(8)	37	(+3)	4.2	(5)
5	40	8.3	(10)	45	(+7)	21	(25)
6	-	-	-	50	(+10)	-	-

ISO Class Example 1 Solid 4 Water 1 Oil

ISO Class 2 ■ 2

Any compressor with aftercooler and coalescer. Air intended for use with lubricated air tools, air motors, cylinders, shot blasting, non-frictional valves.

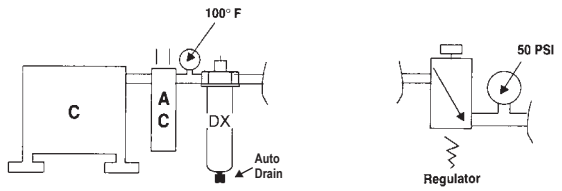

ADDITIONAL SPECS: CGA - G7.1 (Grades A & Ba1)

ISO Class 1 ■ 1

Any compressor with aftercooler and 2-stage coalescing. Air intended for use as lubricated control valves, cylinders and parts blow-down.

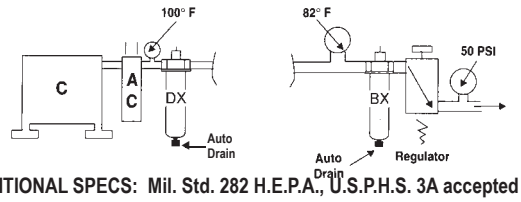

ADDITIONAL SPECS: Mil. Std. 282 H.E.P.A., U.S.P.H.S. 3A accepted particles for milk.

ISO Class 1 ■ 1

Any compressor with aftercooler, 2-stage coalescing and activated carbon filter. Air intended for use with general pneumatics systems.

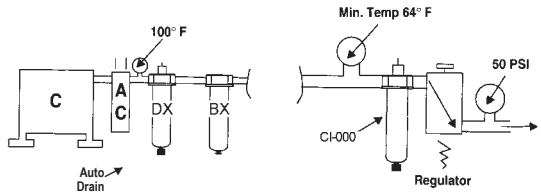

ADDITIONAL SPECS: CGA - G7.1 (Grade C)

ISO Class 1 4 1

Any compressor with aftercooler, 2-stage coalescing and refrigerated dryer for use with instrument quality air.

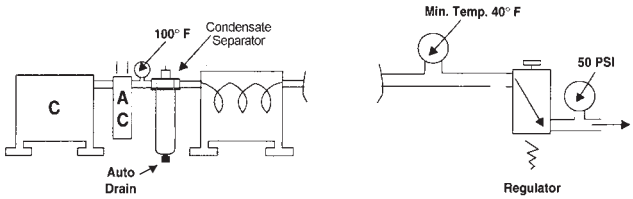

ADDITIONAL SPECS: CGA - G7.1 (Grade D & E) ISA S7.3, sFed. Std. 209 (Class 100)

ISO Class ■ 2 2

Any compressor with aftercooler, 2-stage coalescing, and a -40°F membrane air dryer. Air intended for use as industrial breathing air and decompression chambers.*

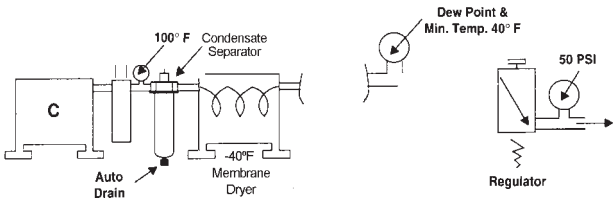

ADDITIONAL SPECS: O.S.H.A. 29CFR 1910.134
*CO Monitor required.

ISO Class 1 1 1

Any 2-stage compressor with aftercooler, double coalescing and a regenerative-type desiccant dryer. Air intended for use in applications involving critical instrumentation and high purity gases.

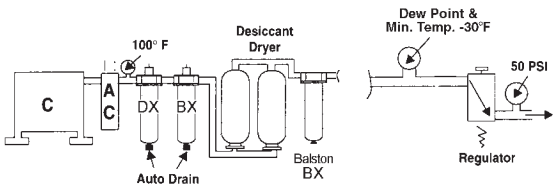

ADDITIONAL SPECS: CGA - G7.1 (Grade F)

Note: In the pictorial examples shown above, the contribution of hydrocarbon vapors has not been taken into account in determining the OIL class category.

Compressed Air Filters

Compressed Air and Gas Water Separators

Protect your equipment from contamination:

Balston's new water separators have been designed for the efficient removal of bulk liquid contamination from compressed air. Today, many products are offered for the removal of bulk liquid from compressed air, however, these are often selected based only upon their initial purchase cost, with little or no regard for the separation efficiency they provide or the cost of operation throughout their life. Balston's water separators have been designed from the ground up with the key design focus on air flow management, separation efficiency at all flow conditions, minimal pressure losses and independently validated performance.

Product Features:

- **Tested in accordance with ISO 8573.9**
- **High liquid removal efficiencies at all flow conditions**
- **Low pressure losses for low operational costs**
- **Suitable for variable flow compressors**
- **Works with all types of compressor and compressor condensate**
- **Low maintenance**

Applications:

- **Bulk liquid removal at any point in a compressed air system**
- **Protection to membrane and desiccant dryer prefiltration**
- **Liquid removal from compressor inter-coolers / after-coolers**
- **Liquid separation within refrigeration dryers**

Separation Efficiency

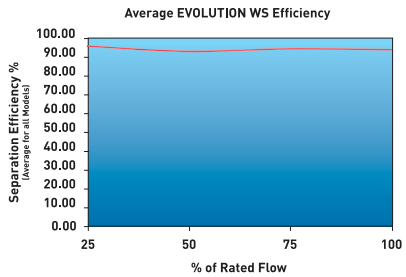

Tested with an Inlet challenge concentration of 33ml/m³hr and in accordance with ISO 8573.9.
Performance shown is an average for all models in range. Individual model performance available on request.

Compressed Air Filters

Compressed Air and Gas Water Separators

Product Selection and Technical Data

Part Number	Port Size (inches) NPT	SCFM at 100 PSIG	Max Operating Pressure	Max Operating Temp	Min Operating Temp
WS002N	1/4"	25	232	176°F	35°F
WS003N	3/8"	25	232	176°F	35°F
WS004N	1/2"	25	232	176°F	35°F
WSOH3N	3/8"	100	232	176°F	35°F
WS0H4N	1/2"	100	232	176°F	35°F
WS006N	3/4"	100	232	176°F	35°F
WS008N	1"	100	232	176°F	35°F
WS0H6N	3/4"	250	232	176°F	35°F
WS0H8N	1"	250	232	176°F	35°F
WS0010N	1-1/4"	250	232	176°F	35°F
WS0012N	1-1/2"	250	232	176°F	35°F
WS0H10N	1-1/4"	750	232	176°F	35°F
WS0H12N	1-1/2"	750	232	176°F	35°F
WS0016N	2"	750	232	176°F	35°F
WS0020N	2-1/2"	1700	232	176°F	35°F
WS0024N	3"	1700	232	176°	35°

Flow/Pressure Correction Factors

(to calculate flow rates below and above 100 PSIG use this table)

Line Pressure (psig)	Correction Factor
15	0.25
29	0.38
44	0.50
58	0.63
73	0.75
87	0.88
100	1.00
116	1.06
131	1.12
145	1.17
160	1.22
174	1.27
189	1.32
203	1.37
218	1.41
232	1.46

Dimensions and Weights

Part Number	Port Size (inches)	Dimensions (inches) A	B	C	Weight (lbs)
WS002N	1/4"	3	7.2	6	1.3
WS003N	3/8"	3	7.2	6	1.3
WS004N	1/2"	3	7.2	6	1.3
WSOH3N	3/8"	3.8	9.3	7.9	2.4
WS0H4N	1/2"	3.8	9.3	7.9	2.4
WS006N	3/4"	3.8	9.3	7.9	2.4
WS008N	1"	3.8	9.3	7.9	2.4
WS0H6N	3/4"	5.1	10.8	9.2	4.8
WS0H8N	1"	5.1	10.8	9.2	4.8
WS0010N	1-1/4"	5.1	10.8	9.2	4.8
WS0012N	1-1/2"	5.1	10.8	9.2	4.8
WS0H10N	1-1/4"	6.7	17	15	11.2
WS0H12N	1-1/2"	6.7	17	15	11.2
WS0016N	2"	6.7	17	15	11.2
WS0020N	2-1/2"	8.1	19.9	17.5	22
WS0024N	3"	8.1	19.9	17.5	22

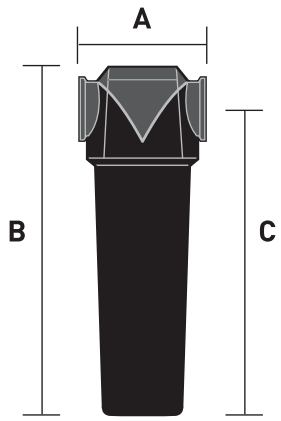

Compressed Air Filters

Filter Installation Recommendations

Recommendations for Typical Filter Installations

Selecting the proper location for a filter in a compressed air line is as important as selecting the proper filter. In most cases you will probably be able to base your own installation on these recommendations for typical installations.

Placing the Filter at the Compressor

The standard compressor installation consists of a prefilter (mounted on the compressor), a compressor, aftercooler, and a receiver. The Balston filter should be installed downstream from the receiver. In a system with an efficient aftercooler, the distance from the receiver to the filter is not important. Since the filter is usually maintained by the personnel responsible for the compressor, it is often convenient to install the filter downstream from the receiver. If there is no aftercooler, or the aftercooler is not efficient, coalescing filter be installed as close to the point(s) of use as possible.

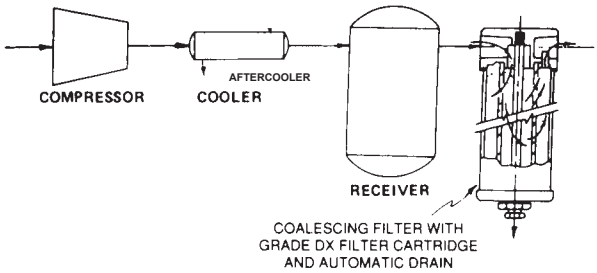

Compressor Filter Specifications

Microfibre Filter Cartridge	Grade DX
Filter Housing	Determine filter size from flow chart on page 3, but port size must be equal to or larger than the line size
Automatic Drain	Recommended
Differential Pressure Indicator	Recommended

Some compressor installations do not have an aftercooler (this is an undesirable situation). Air saturated with water vapor leaves a compressor at 240°F to 400°F (116°C to 204°C). Without an aftercooler, the air cools close to room temperature in the distribution lines and water condenses throughout the air distribution system. About two-thirds of the total water content of the air will be condensed when the air has cooled to 100°F (38°C). A filter located just before the main air line branches into smaller distribution lines will remove most of the water load from the system. The filter requirements for the main line are described above; they are the same as for a system with an aftercooler. However, since the air will continue to cool in the distribution system, additional filters located at end- use points will be required to remove water condensed downstream from the main line filter.

How to Obtain a Trouble-Free Coalescer

The mechanism of coalescing leads to three important considerations in selecting and installing a coalescing filter:

1. The filter should be large enough to ensure that the air exits the filter at low velocity and does not carry over coalesced liquid. Proper sizing of a Balston coalescing filter is easily done by using the recommendations or the maximum flow rate data. There is no danger on oversizing the filter. A Balston coalescing filter is even more efficient at extremely low flow rates than at its maximum rated flow capacity.
2. To avoid liquid carryover, the coalesced liquid should not be allowed to build up in the filter housing above the level of the bottom of the filter tube.

   Rather than relying on operator attention to this easily-overlooked job, Parker Hannifn Corp. recommends automatic drains with all coalescing filters.
3. The flow direction through the Microfibre filter tube must be inside-to-outside to permit the liquid to drip from the outside of the tube to the drain in the filter housing. If installed outside-to-inside, the filter will at first function as a coalescing filter, but liquid will collect on the inside of the filter tube. Since there is no way of draining the liquid, the level will build up rapidly until it begins to be carried downstream by the air flow. The filter will work at removing liquids for a short time, and then not work at all. If the Balston coalescing filter exhibits these symptoms, reversing the flow direction will solve the problem.

Compressed Air Filters

Filter Installation Recommendations

Removing Oil from Compressed Air

The source of oil in compressed air is the compressor lubricant. The common plant problems resulting from oil in the air are caused by liquid oil depositing in valves, instrument control surfaces, and other critical points in the air distribution system.

Balston often receives inquiries from users of compressed air about removing oil vapor from the air, yet the only reason for concern about oil vapor in most applications is that it may condense to liquid oil. Just like water vapor, oil vapor will condense to liquid when the temperature is reduced or the air pressure is increased at constant temperature. However, the table below show that while in theory, condensation of oil vapor and water vapor are similar, in practice the effect of condensation of the two vapors is quite different.

Concentration of vapor, parts per million by weight (ppm) in air at 100 psig, at indicated temperature

	Petroleum Base Oil	Synthetic Oil	Water
80°F	0.012	0.002	2,743.
100°F	0.05	0.01	5,137.
125°F	0.2	0.06	10,508.
150°F	0.7	0.2	20,119.
200°F	3.5	2.4	62,371.

From the above figures, one can calculate that if 100 SCFM of air is filtered at 125°F to remove all liquids, and is subsequently cooled to 80°F, condensed liquids would consist of: water 3.6 lbs per hour, and either petroleum base oil 0.001 lbs. per hour, or synthetic oil 0.0003 lbs per hour. Condensed water is potentially a serious problem, but the quantity of condensed oil vapor is extremely small.

Field tests show that the liquid oil in air from a well-maintained reciprocating compressor is typically in the range of 15 to 30 ppm. With an oil-sealed rotary screw compressor, liquid oil content in the compressed air can vary from 10 to more than 100 ppm, depending upon the efficiency of the bulk oil separator. Compared to these figures, the approximate 0.2 ppm of liquid oil which could result from oil vapor condensation is for practical purposes negligible.

Therefore, removing the liquid oil from compressed air with a Balston coalescing filter, even at temperatures as high as 125°F, will eliminate the chance of oil-caused problems downstream in virtually all installations.

There are rare instances in which even 0.2 ppm oil vapor in the air or gas can cause a problem; for example, in contact with a sensitive catalyst or other highly reactive material.

In those cases, the trace quantity of oil vapor can be reduced using an adsorbent-loaded cartridge, following coalescing filter to remove the liquid oil.

Placing the Filter at the Point-Of-Use

Whether or not the system has an aftercooler, Balston strongly recommends a filter at each critical end-use point, even if a main line Grade DX filter has been used. The point-of-use filters will remove dirt and oil which may have been in the distribution lines, as well as water that has condensed downstream from the main filter. If there is a pressure regulator at the end-use point, the filter should be installed immediately upstream from the regulator. Alternatively, replace the existing regulator with a combination Balston filter-regulator.

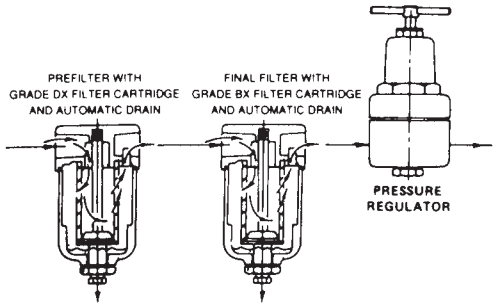

Point-of-Use Filter Recommendations

Microfibre Filter Cartridge	Grade BX
Filter Housing	Size from flow chart or by line size
Automatic Drain	Recommended (refer to Page 18)

If there is no Grade DX filter upstream from the final filter, or if a significant amount of water or oil is expected, then a two-stage system, Grade DX followed by Grade BX, is required at each use point. The housing and automatic drain for the Grade DX prefilter should be the same as for the Grade BX final filter (if the flow capacities permit).

Even if the application is not particularly sensitive to impurities in the air - for example, an air-driven tool - it is still good practice to remove condensed water with a filter at the end of the line. Parker recommends a single-stage Grade DX filter with automatic drain.

Compressed Air Filters

Filter Installation Recommendations

Using Filters With Air Dryers

Properly specified filters are relatively inexpensive protection for air dryers. Both refrigerated and desiccant dryers benefit from filter protection.

Refrigerated Dryers

A Grade DX prefilter with automatic drain should be installed upstream from a refrigerated dryer to prevent oil and condensed water from entering the dryer. Oil entering a dryer coats the cooling coil and reduces its efficiency; condensed water increases the cooling load and reduces dryer capacity. A dryer that was in operation before a Balston filter was installed may already have oil inside it. Therefore a second filter, a Grade BX filter with automatic drain, must be installed downstream from the dryer if oil-free air is required.

Desiccant Dryers

Desiccant dryers are very sensitive to water and oil droplets. Water can saturate the desiccant and reduce its drying efficiency or even destroy it. Oil can coat the desiccant, rendering it ineffective, or the oil can accumulate on the desiccant and create a combustion hazard when the desiccant is heated for regeneration.

For maximum protection of the desiccant dryer, a two-stage filter (Grade DX followed by Grade BX) system with automatic drains should installed upstream from the dryer. To protect downstream delivery points from abrasive desiccant particles, a high efficiency filter with high solids holding capacity should be installed downstream from the dryer. The Balston Grade DX filter cartridge is recommended for this downstream installation location. (Note: All Balston desiccant dryers are equipped with prefilters and final filters, as recommended above).

Membrane Dryers

Membrane air dryers are sensitive to water and oil droplets. Oil can permanently damage the hollow fiber core. Balston Membrane Air Dryers are assembled with maximum protection, two stage coalescing filters (Grade DX followed by BX) designed to remove all contaminants down to 0.01 microns. Most all other membrane dryers are not assembled with adequate prefiltration protection and should be protected with a two stage Balston Filter System (Grade DX, Grade BX).

Maintaining The Filters

In a typical compressed air delivery system, a properly specified Balston filter cartridge can be expected to last for one year. The filter cartridge can continue to coalesce indefinitely, but solids loading in the depth of the cartridge will cause a pressure drop through the housing. The filter should be changed when the pressure drop reaches 10 psi. At pressure drops higher than 10 psig, the cartridge will continue to perform at its rated efficiency, but downstream instrumentation may be affected by the pressure drop.

To monitor the condition of the filters, install Balston Differential Pressure Indicators (DPI) on the filters or across a multi-filter installation. The DPI gives a visual indication of differential pressure through the filter cartridge. The Balston Differential Pressure Indicator is factory-installed on 1/4” and larger line size Balston Compressed Air Filter Assemblies. To use a DPI with a smaller Balston Compressed Air Filter, pressure taps must be provided with “tees” on the line upstream and downstream from the filter.

Compressed Air Filters

1/4” and 1/2” Line Size Filters

Models A914D, A914P, A914, A914A

Models A914P and A914D are 1/4” line size assemblies with simple, reliable “automatic” drains used for low flow applications with moderate levels of liquid contaminate. The A914P is designed to empty condensate when there is a sudden pressure drop through the system (intermittent compressed air demand applications). The A914D incorporates an overnight drain which will drain liquid contaminate when the compressed air system pressure drops below 5 psig. The standard A914 utilizes a standard manual threaded drain. All models have a transparent polycarbonate bowl with an aluminum head. The Model A914A has a zinc bowl.

Model A914D, A914P, A914

Model A914A

Models 2002, 2003, and 2004

Models 2002 and 2003 are 1/4” and 3/8” line size assemblies. These filters have increased liquid holding capacity and are equipped with high capacity float drains, differential pressure indicators, sightglass, pressure relief valve, and 1/4 turn bayonet bowl closures. The 2004 series is designed to service 1/2” compressed air lines with low flow rates.

Model 200X Series

Model 2104

The Model 2104 is a 1/2” line size assembly with an aluminum bowl. The filter housing has a large liquid holding capacity and a high capacity float drain, differential pressure indicator, sightglass, pressure relief valve, and 1/4 turn bayonet bowl closure.

Model 2104 Series

Compressed Air Filters

1/4" and 1/2" Line Size Filters

Principal Specifications

Model	A914	A914A	2002, 2003, 2004 (1)	2104 (1)
Port Size	1/4" NPT	1/4" NPT	1/4", 3/8", 1/2" NPT	1/2" NPT
Materials of Construction				
Head	Anod. Alum.	Anod. Alum.	Anod. Alum.	Anod. Alum.
Bowl	Polycarbonate	Zinc	Anod. Alum.	Anod. Alum.
Internals	Nylon	Nylon	Nylon	Nylon
Seals	Buna-N	Buna-N	Buna-N	Buna-N
Maximum Temperature	120°F (49°C)	220°F (104°C)	130°F (54°C) (2)	130°F (54°C) (2)
Maximum Pressure	150 psig (3)	250 psig (3)	250 psig (3)	250 psig (3)
Minimum Pressure	5 psig (4)	5 psig (4)	15 psig (4)	15 psig (4)
Shipping Weight	0.5 lbs. (0.2 kg)	0.5 lbs. (0.2 kg)	2.0 lbs. (0.9 kg)	2.5 lbs. (1.1 kg)
Dimensions	1.5"W X 4.0"L (4cm X 10cm)	1.5"W x 4.0"L (4cm X 10cm)	3.3"W X 8.5L" (8cm X 20cm)	3.3"W X 11.3"L (8cm X 28cm)

Ordering Information

For assistance, call toll-free at 1-800-343-4048 8AM to 5PM Eastern Time

Model	A914	A914A (8)	2002, 2003, 2004 (1)	2104 (1)
Differential Pressure Indicator	Not Included (7)	Not Included (7)	Included (7)	Included (7)
Replacement Filter Cartridges				
No. Required	1	1	1	1
Box of 5	5/050-05-❑ (5)	5/050-05-❑ (5)	5/100-12-❑ (5)	5/100-18-❑ (5)
Cartridges Box of 10	050-05-❑ (5)	050-05-❑ (5)	100-12-❑ (5)	100-18-❑ (5)
CI Cartridge Box of 1	—	—	CI-100-12-000 (5)	CI-100-25-000 (5)

Notes:

1 Lifetime (20 year) Warranty included. Contact your local representative for details.

2 Automatic drain and Differential Pressure Indicator are temperature limiting factors. For Temperature capabilities to 220°F (104°C), order assemblies without automatic Drain and Differential Pressure Indicator.

3 Maximum pressure ratings are for temperatures to 130°F (54°C). Please consult factory for maximum pressure ratings at elevated temperatures.

4 Required for proper operation of piston drain, overnight drain, or float drain.

5 Indicate grade of filter cartridge by putting appropriate letter after ordering number. To order assembly with Type CI cartridges, add-000 after assembly number. Example: 2104N-0A0-000

6 Automatic drains not supplied with assemblies containing Type CI cartridges.

7 Differential Pressure Indicator (DPI) Kit may be ordered separately, P/N 41-071. DPI is sensitive in the range of 0-7 psi differential.

8 Order A914D-_X for overnight drain installed in the filter assembly.
Order A914P-_X for piston drain installed in the filter assembly.
Order A914A-_X for aluminum bowl and 250 psig rating.

How to Order the Filter Assembly*

Build your own custom filter assembly using the guideline matrix below and specify your model number. Example: 1/2" filter with DPI and Auto Drain with Grade DX Filter = 2104N-1B1-DX.

***Consult Factory. Not all configurations are available.**

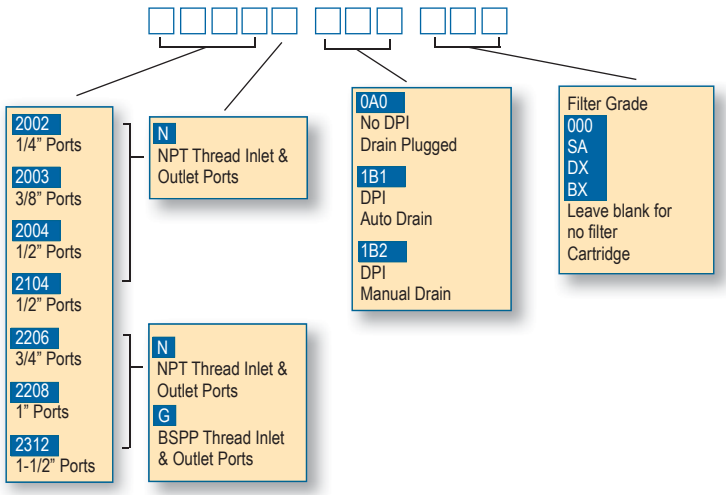

Compressed Air Filters

3/4" to 2" Line Size Filters

Models 2206, 2208, 2312, and A15/80

The Model A15/80 filter assembly has 2" NPT inlet and outlet ports, an automatic float drain and differential pressure indicator installed. The Models 2206, 2208, and 2312 filter assemblies have 3/4", 1", and 1 1/2" NPT inlet and outlet ports, respectively; these models are also equipped with automatic drains, sight glasses, pressure relief valve, bayonet closures, and differential pressure indicators. Materials of construction are shown below.

Model 2312N

Model 2206N

Model A15/80

Principal Specifications

Model A15/80	2206 (1)	2208 (1)	2312 (1)	
Port Size	3/4" NPT	1" NPT	1 1/2" NPT	2" NPT
Materials of Construction				
Head	Anod. Alum.	Anod. Alum.	Anod. Alum.	Anod. Alum.
Bowl	Anod. Alum.	Anod. Alum.	Anod. Alum.	Steel
Internals	Aluminum	Aluminum	Aluminum	St. Steel
Seals	Buna-N	Buna-N	Nuna-N	Buna-N
Maximum Temperature	130°F (54°C) (2)	130°F (54°C) (2)	130°F (54°C) (2)	130°F (54°C) (2)
Maximum Pressure	250 psig (3)	250 psig (3)	250 psig (3)	250 psig (3)
Minimum Pressure	15 psig (4)	15 psig (4)	15 psig (4)	15 psig (4)
Shipping Weight	8 lbs. (3.6 kg)	8 lbs. (3.6 kg)	15 lbs. (6.8 kg)	11 lbs. (5 kg)
Dimensions	4"W X 13"L (10cm X 33cm)	4"W X 13"L (10cm X 33cm)	5.0"W X 17L" (13cm X 43cm)	6.3"W X 28"L (16cm X 71cm)

Ordering Information

For assistance, call toll-free at 1-800-343-4048 8AM to 5PM Eastern Time

Model	2206	2208	2312	A15/80
Differential Pressure Indicator	Included (6)	Included (6)	Included (6)	Included (6)
Replacement Filter Cartridges				
No. Required	1	1	1	1
Box of 5	5/150-19-❑ (5)	5/150-19-❑ (5)	5/200-35-❑ (5)	5/200-80-❑ (5)
Box of 10	150-19-❑ (5)	150-19-❑ (5)	200-35-❑ (5)	200-80-❑ (5)
CI Cartridge (Box of 1)	CI150-19-000	CI150-19-000	CI200-35-000	CI200-80-000

Notes:

1 Lifetime (20 year) Warranty included. Contact your local representative for details.

2 Automatic Drain and Differential Pressure Indicator are limiting factors. For temperature capabilities to 220°F (104°C), order assemblies without Auto Drain and Differential Pressure Indicator.

3 Maximum pressure ratings are for temperatures to 130°F (54°C). Please consult factory for maximum pressure ratings at elevated temperatures.

4 Required for proper operation of the float drain.

5 Indicate grade of filter cartridge by putting appropriate letter after ordering number (please refer to PK1-2). Example: 5/150-19-DX, 200-35-BX.

6 The DPI is sensitive in the range of 0-5 psi differential.

Compressed Air Filters

3” to 10” Line Size Filters

New LF/FF Series Multiple Cartridge Filter Assemblies

These filter assemblies provide high efficiency filtration of compressed air and other compressed gases at very high flow rates. With inlet and outlet ports accommodating 3” to 10” pipe sizes, the new LF/FF Series housings are capable of flow rates up to a maximum capacity of 37,350 SCFM at 100 psig. The standard carbon steel units, which are generally in stock (through 6” line sizes), have pressure ratings up to 250 psig.

All LF/FF series housings are ASME Code Stamped for the rated maximum operating pressure. All FF Series vessels have built-in legs for floor mounting. Selected models have swing bolt enclosures for easy access to the internals. The filter cartridges in all models are sealed by tightening the threaded retainer cap onto the rigid tie rod, ensuring a leak tight seal on both ends of the cartridge.

Each assembly is equipped with a stainless steel automatic float drain, differential pressure indicator, and a set of filter cartridges (except where noted).

Benefits

- *Low Pressure Drop*
- *Lower Change out/Labor Costs*
- *Lower Energy Costs*
- *High Dirt Holding Capacity*
- *Heat and Chemical Resistant*
- *No Wet Zone*
- *Oleophobic/Hydrophobic*
- *High Burst Strength*

Calculation with Part-Load Operation (100 hp compressor)

Annual Electricity Costs =
[(Motor full-load brake horsepower) x (0.746 kW/hp)
x (Annual Hours of Operation) x (Electricity Cost in $/kWh)] x [(Percent of time running fully loaded) + (0.30) x (Percent of time running unloaded)]
For example:
Full load motor efficiency = 90%
Motor full load bhp = 100 hp
Annual hours of operation = 8,760 hours (3-shift, continuous operation)
Runs 65% of the time fully loaded, 35% of the time unloaded
Unloaded operation consumes 30 percent of the electricity of fully loaded operation
Cost of electricity = $0.10/kWh
Annual electricity costs =
[(100 hp) x (0.746 hp/kW) x (8,760 hrs) x $0.10/kWh) / 0.9] x [0.65 + (0.30) x (0.35)] = **$54,272.00**

HFC Savings

Annual electricity costs to operate a 100 HP Compressor can be as high as $50,000. Pressure loss in the system adds to this expense. For a system operating at 100 psig that loses 2 psig of pressure through a filter, requires an additional 1% in operating energy costs (1).

Installing a single stage HFC Filter in place of a standard brand X filter, will reduce the pressure drop by 2+ psi.

Based on a standard 100 HP compressor operating at a 65% load cycle, a 1% reduction in annual operating costs would be equal to $542.00

NEW!

High Flow Coalescing Filter Media HFC Grade

Efficiency: 99.5% @ 0.5 micron

Balston’s HFC media consists of two layers. The outer layer features a dense matrix of glass fibers. It provides highly efficient coalescing aerosol removal and very low pressure drop. The inner layer, or initial stage of filtration, effectively traps dirt particles, protecting and extending the life of the outer layer. A metal retainer is used for strength and stability. This media is used in bulk coalescing applications and when relatively high efficiency and low pressure drop are required.

High Efficiency Coalescing Media HEC Grade

Efficiency: 99.97% @ 0.01 micron

Air Flow: Inside to Outside

This coalescing element is composed of an epoxy saturated borosilicate glass micro-fiber tube. The HEC grade filter has a pleated cellulose inner layer as a built-in prefilter. This element is metal retained for added strength, and includes a synthetic fabric layer.

HEC filters are used when “total removal of liquid aerosols and suspended fines” is required. Because of its overall performance characteristics, this grade is most often recommended.

The HEC element is great prefilter protection for desiccant air dryers. This element prevents oil or varnish from coating the desiccant, while maintaining the dryer efficiency.

(1) Compressed Air Challenge, Doc # F9-1, April, 1998-Rev.0.

Compressed Air Filters

HFC MEDIA Max. Rated Flows (SCFM) at Various Operating Pressures
(0.25 psi pressure drop)

Model Number	2 PSIG	20 PSIG	40 PSIG	80 PSIG	100 PSIG	125 PSIG	150 PSIG	175 PSIG	200 PSIG	220 PSIG	250 PSIG
ALN3-0128-HFC	363	753	1187	2056	2490	3033	3575	4118	4661	5095	5746
ALF3-0128-HFC	363	753	1187	2056	2490	3033	3575	4118	4661	5095	5746
ALF4-0125-HFC	483	1004	1583	2741	3320	4044	4767	5491	6215	6793	N/A
ALF6-0136-HFC	725	1507	2375	4112	4980	6065	7151	8236	9322	10190	N/A
ALF6-0336-HFC	1088	2260	3562	6167	7470	9098	10726	12354	13983	15285	N/A
AFN3-0128-HFC	363	753	1187	2056	2490	3033	3575	4118	4661	5095	5746
AFF3-0128-HFC	363	753	1187	2056	2490	3033	3575	4118	4661	5095	5746
AFF4-0125-HFC	483	1004	1583	2741	3320	4044	4767	5491	6215	6793	N/A
AFF6-0136-HFC	725	1507	2375	4112	4980	6065	7151	8236	9322	10190	11493
AFF6-0328-HFC	1088	2260	3562	6167	7470	9098	10726	12354	13983	15285	N/A
AFF8-0428-HFC	1450	3013	4750	8223	9960	12131	14302	16472	18644	20380	22984
AFF10-0728-HFC	2538	5273	8312	14391	17430	21229	25028	28826	32627	35665	40222
AFF12-1128-HFC	3988	8286	13062	22614	27390	33360	39330	45298	51271	56045	63206
AFF16-1528-HFC	5438	11299	17812	30837	37350	45491	53632	61770	69915	76425	86190

HEC MEDIA Max. Rated Flows (SCFM) at Various Operating Pressures
(1.5 psi pressure drop)

Model Number	2 PSIG	20 PSIG	40 PSIG	80 PSIG	100 PSIG	125 PSIG	150 PSIG	175 PSIG	200 PSIG	220 PSIG	250 PSIG
ALN3-0128-HEC	218	454	715	1238	1500	1827	2154	2481	2808	3069	3462
ALF3-0128-HEC	218	454	715	1238	1500	1827	2154	2481	2808	3069	3462
ALF4-0125-HEC	219	605	954	1651	2000	2436	2872	3308	3744	4092	N/A
ALF6-0136-HEC	437	908	1431	2477	3000	3654	4308	4962	5616	6139	N/A
ALF6-0328-HEC	654	1362	2145	3714	4500	5481	6462	7443	8424	9207	N/A
AFN3-0128-HEC	218	454	715	1238	1500	1827	2154	2481	2808	3069	3462
AFF3-0128-HEC	218	454	715	1238	1500	1827	2154	2481	2808	3069	3462
AFF4-0125-HEC	291	605	954	1651	2000	2436	2872	3308	3744	4092	N/A
AFF6-0136-HEC	437	908	1431	2477	3000	3654	4308	4962	5616	6139	6923
AFF6-0328-HEC	654	1362	2145	3714	4500	5481	6462	7443	8424	9207	N/A
AFF8-0428-HEC	872	1816	2860	4952	6000	7308	8616	9924	11232	12276	13848
AFF10-0728-HEC	1526	3178	5005	8666	10500	12789	15078	17367	19656	21483	24234
AFF12-1128-HEC	2398	4994	7865	13618	16500	20097	23694	27291	30888	33759	38082
AFF16-1528-HEC	3270	6810	10725	18570	22500	27405	32310	37215	42120	46035	51930

Housing Selection Chart

Model Number	HFC Replacement Element	HEC Replacement Element	Port Size	Port Type	# of Elements
LINE MOUNT VESSELS					
ALN3-0128-H?C	510-28- HFC	510-28-HEC	3	NPT	1
ALF3-0128-H?C	510-28- HFC	510-28- HEC	3	FLANGE	1
ALF4-0125-H?C	850-25- HFC	850-25- HEC	4	FLANGE	1
ALF6-0136-H?C	850-36- HFC	850-36- HEC	6	FLANGE	1
ALF6-0328-H?C	510-28- HFC	510-28- HEC	6	FLANGE	3
FLOOR MOUNT VESSELS					
AFN3-0128-H?C	510-28- HFC	510-28- HEC	3	NPT	1
AFF3-0128-H?C	510-28- HFC	510-28- HEC	3	FLANGE	1
AFF4-0125-H?C	850-25- HFC	850-25- HEC	4	FLANGE	1
AFF6-0136-H?C	850-36- HFC	850-36- HEC	6	FLANGE	1
AFF6-0328-H?C	510-28- HFC	510-28- HEC	6	FLANGE	3
AFF8-0428-H?C	510-28- HFC	510-28- HEC	8	FLANGE	4
AFF10-0728-H?C	510-28- HFC	510-28- HEC	10	FLANGE	7
AFF12-1128-H?C	510-28- HFC	510-28- HEC	12	FLANGE	11
AFF16-1528-H?C	510-28- HFC	510-28- HEC	16	FLANGE	15

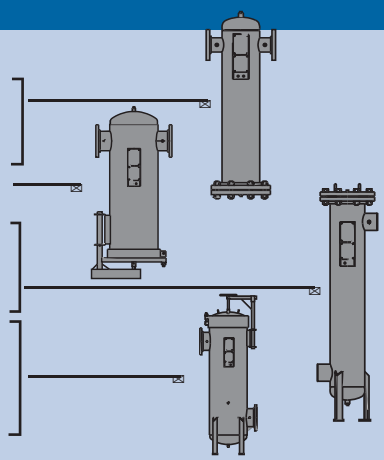

Compressed Air Filters

Drawings, Dimensions & Specifications

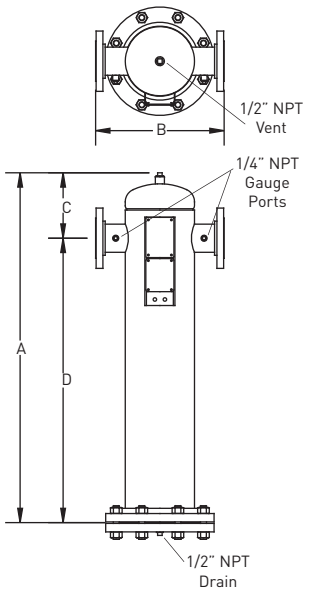

Refer to this drawing for:
ALN3
ALF3
ALF4
ALF6-0136

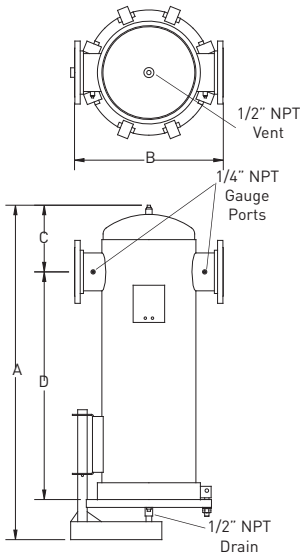

Refer to this drawing for:
ALF6-0328

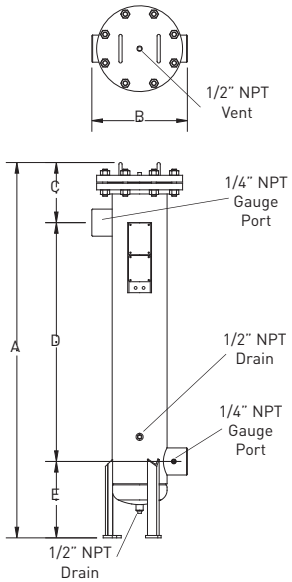

Refer to this drawing for:
AFN3
AFF3
AFF4
AFF6-0136

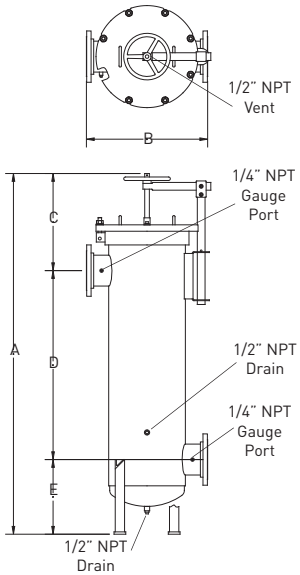

Refer to this drawing for:
AFF6-0328
AFF8
AFF10
AFF12
AFF16

Dimensions	A	B	C	D	E	Element Removal Clearance (Inches/centimeters)	Sump Capacity (gallons/liters)	Weight (pounds/kilograms)
ALN3	43.1/109.5	15.0/38.1	7.7/19.5	35.4/89.9	–	28/71.1	0.81/3	190/86
ALF3	43.1/109.5	16.0/40.6	7.7/19.5	35.4/89.9	–	28/71.1	0.81/3	190/86
ALF4	42.7/108.5	20.0/50.8	9.7/24.6	33.0/83.8	–	25/63.5	2.0/7	380/173
ALF6-0136	56.4/143.3	20.0/50.8	11.4/29.0	45.0/114.3	–	36/91.4	2.0/7	380/173
ALF6-0328	57.8/146.8	26.0/66.0	11.0/27.9	39.8/101.1	–	28/71.1	2.0/7	340/155
ALFN3	58.9/149.6	15.0/38.1	9.4/23.8	37.5/95.2	12.0/30.4	28/71.1	1.1/4	190/86
AFF3	58.9/149.6	16.0/40.6	9.4/23.8	37.5/95.2	12.0/30.4	28/71.1	1.2/4	200/91
AFF4	63.3/160.7	20.0/50.8	12.3/31.2	35.0/88.9	16.0/40.6	25/63.5	4.2/16	370/168
AFF6-0136	75.3/191.2	20.0/50.8	12.3/31.2	47.0/119.3	16.0/40.6	36/91.4	3.6/14	410/186
AFF6-0328	77.3/196.3	26.0/66.0	20.8/52.8	40.5/102.8	16.0/40.6	28/71.1	5.0/19	340/155
AFF8	87.3/221.7	30.0/76.2	25.8/65.5	42.5/108.0	19.0/48.3	28/71.1	8.7/33	550/250
AFF10	96.0/243.8	34.0/86.3	28.5/72.4	45.5/115.5	22.0/55.8	28/71.1	14.8/56	750/341
AFF12	101.0/256.5	44.0/111.7	27.5/69.8	47.5/120.6	26.0/66.0	28/71.1	25.5/97	1300/591
AFF16	112.0/28.4	52.0/132.0	32.0/81.3	50.0/127.0	30.0/76.2	28/71.1	56.2/213	1700/773

Materials of Construction

Body: Carbon Steel
Paint: Epoxy Enamel (Gray)
Internals: Epoxy powder painted carbon steel
Seals: Inorganic flange gasket (single element vessels)
Fluorocarbon o-ring (multi element vessels)
Internal Coating: Epoxy enamel

Specifications

Max Pressure: Up to 220-250 PSIG (Consult Flow Chart)
Max Temperature: 225°F(107°C)
Meets A.S.M.E. Code, Section VIII, Division 1:
Note: Consult factory for special requirements

Compressed Air Filters

Balston High Pressure Compressed Air Filters

Balston high pressure compressed air filters offer exceptionally high efficiency coalescing filtration of compressed air at high flow rates. The housings are ASME Code stamped to 665 psig.

Since the coalesced liquid drains continuously from the filter cartridges as rapidly as it is collected, the filters have an unlimited capacity for liquid removal.

Each filter cartridge is mounted on a rigid permanent filter holder with a vibration-resistant removable tube retainer. The filter cartridge is self gasketing, and the filter holder is designed so that a perfect seal is easily made, even when the tube is replaced by an operator unfamiliar with the equipment.

AKH housings are available with inlet and outlet ports covering the range from 3” to 10” pipe sizes.

Principal Specifications - High Pressure Group

Model (5)	AKH-0280	AKH-0480	AKH-0880	AKH-1480	AKH-2280
Port Size	3” FLG	4” FLG	6” FLG	8” FLG	10” FLG
Materials of Construction					
Vessel	Carbon Steel	Carbon Steel	Carbon Steel	Carbon Steel	Carbon Steel
Filter Cartridge Holders	303 St. Steel	303 St. Steel	303 St. Steel	303 St. Steel	303 St. Steel
Seals	Buna-N	Buna-N	Buna-N	Buna-N	Buna-N
Maximum Temperature	250°F (121°C) (1)	250°F (14°C) (1)	250°F (121°C) (1)	250°F (121°C) (1)	250°F (121°C) (1)
Maximum Pressure	665 psig (2)	665 psig (2)	665 psig (2)	665 psig (2)	665 psig (2)
Minimum Pressure	10 psig	10 psig	10 psig	10 psig	10 psig
Shipping Weight	150 lbs. (68 kg)	270 lbs. (123 kg)	560 lbs. (254 kg)	1120 lbs. (508 kg)	1430 lbs. (649 kg)
Dimensions	16”W X 41”H (41cm X 104cm)	21”W X 40”H (53cm X 102cm)	25”W X 43”H (64cm X 109cm)	34”W X 54”H (86cm X 137cm)	36”W X 57”H (91cm X 145cm)
Flange Center Line to Floor Dimension	7.75” (20cm)	6.25” (16cm)	8.5” (22cm)	16.25” (41cm)	17.25” (44cm)
Flange to Flange Dimension	15.63” (40cm)	20.63” (52cm)	24.75” (63cm)	34” (86cm)	36” (91cm)

Ordering Information - High Pressure Group (4)

For assistance, call toll-free at 1-800-343-4048 8AM to 5PM Eastern Time

Model (3)	AKH-0280-❑	AKH-0480-❑	AKH-0880-❑	AKH-1480-❑	AKH-2280-❑
Replacement Filter Cartridges No. Required	2	4	8	14	22
Box of 5	5/200-80-❑ (4)	5/200-80-❑ (4)	5/200-80-❑ (4)	5/200-80-❑ (4)	5/200-80-❑ (4)
Box of 10	200-80-❑ (4)	200-80-❑ (4)	200-80-❑ (4)	200-80-❑ (4)	200-80-❑ (4)
CI Cartridge (Box of 1)	CI-200-80-000	CI-200-80-000	CI-200-80-000	CI-200-80-000	CI-200-80-000

Notes:

1 Maximum operating temperature of carbon steel vessel is 650°F (343°C). Minimum operating (process and ambient pressure) temperature is -20°F (29°C). Max. Temps. for Seal material: 250°F (Buna), 400°F (Viton), 450°F (Silicone). Seal material may not be the limiting factor. Maximum temperature for assemblies with DPI is 130°F (54°C)

2 Vessel is ASME Section VIII, Div. 1 code stamped for rated pressure.

3 Differential Pressure Indicator and Automatic Drain are not included with AKH Assemblies, or with assemblies containing Type CI Cartridges.

4 To order filter cartridges, indicate grade of filter cartridge by placing appropriate letter cartridge designation after the last digit. Example: 200-80-DX.

Stainless Steel Compressed Air Filters for Harsh Environments

Balston Stainless Steel Compressed Air Filter Assemblies:

Balston Compressed Air Filters protect your equipment and delicate instruments from the dirt, water, and oil usually found in compressed air and other gases. These filters will remove contaminants at a very high efficiency - up to 99.99% for 0.01 micron particles and droplets. Liquid releases from the filter cartridge to an automatic drain as rapidly as it enters the filter. This allows the filter to continue removing liquids for an unlimited time without loss of efficiency or flow capacity. Select 1/4" to 1" line filters are constructed of 304 stainless steel and are designed to hold up to the harshest environments.

Product Features:

- **All 304 stainless steel construction, ideal standing up to aggressive washdown chemicals**
- **Remove 99.99% of 0.01 micron particles of oil, water, and dirt from compressed air and other gases**
- **For Sterile Air Requirements:**
- **USDA accepted for use in federally inspected meat and poultry plants**
- **Low pressure drop**
- **Continuously trap and drain liquids**
- **Remove trace oil vapor with adsorbent cartridges**

Petrochemical

Textiles

Pulp and Paper

Refineries

Compressed Air Filters

Stainless Steel Filters for Harsh Environments

Filter Cartridge Description

General purpose applications such as plant compressed air	Single stage filtration. Use a Grade DX filter cartridge
Instrument air and other critical air requirements	Two stage filtration is necessary. Use a Grade DX followed by a Grade BX filter cartridge. As a general rule, a Grade BX filter cartridge should not be used alone.
Removal of trace compressor oil vapor	For rare instances where even a trace amount of oil vapor can cause a problem, three stage filtration is necessary. Use a Grade DX followed by a Grade BX, and a type CI cartridge.

Physical Properties, Microfibre Filter Cartridges

Temperature Range	-40°F to 300°F (-40°C - 149°C)
Maximum Pressure Differential Across Filter, Inside-to-Outside Flow:	100 psi
Materials of Construction	Borosilicate glass microfibers with fluorocarbon resin binder. Resistant to water, all hydrocarbon and synthetic lubricants.

Retention Efficiency

Grade	Efficiency for 0.01 Micron Particles and Droplets
DX	93%
BX	99.99%

Balston Filter Cartridges

Balston provides two grades of coalescing filter cartridges, Grade DX and Grade BX. Singly or in tandem, these filters satisfy all requirements for removing liquid and solid contaminants from compressed air. Balston also has an activated carbon adsorbent CI-type cartridge for the removal of trace oil vapors from a compressed air line. The activated carbon cartridge is Grade 000.

How to Select the Filter Cartridge and Housing

1. Decide which grade(s) of filter cartridges fits the application (see selection boxes at left).
2. Select the filter housing with a port size equal to the line size where the filter is to be located.
3. For a new installation in which the line size has yet to be selected, determine the gas flow rate and pressure at the point where the filter will be located, and then refer to the flow chart on the reverse side of this data sheet. NOTE: The filter port size must be equal to or larger than the line size (when specified).

How to Order the Filter Assembly

1. Build your own custom filter assembly using the guideline matrix on Page 16 and specify your model number. Example: 1/2" filter with DPI and Auto Drain with Grade DX Filter = 6004N-01A-DX.
2. Each assembly is shipped with the filter cartridge installed. To order additional filter cartridges, indicate the model number of the cartridges, and the grade. Examples 050-05-DX, 050-05-BX. The grade used for Type CI cartridges is 000 (CI-100-12-000).

Note: Assemblies with CI Cartridges are shipped with the adsorbent cartridge wrapped separately. This shipping method prolongs the life of the cartridge.

Compressed Air Filters

Stainless Steel Filters for Harsh Environments

Models 6102, 6002, 6904

The 6102 and 6002 series models are 1/4” line size filters designed for lower flow systems and installations with space limitations. It is offered with two drain options, a manual drain or an auto float drain for maintenance free operation. The model 6904 offers 1/2” inlet and outlet connections, for applications requiring 1/2” pipe with space limitation requirements.

Model 6004

The 6004 series models are 1/2” line size filters designed for moderate flow rate systems. This series has increased liquid holding capacity which safeguards sensitive end use points from system upsets and morning start ups.

Models 6006 and 6008

The 6006 and 6008 series models are 3/4” and 1” line size filters respectively. These are designed for high flow rate systems servicing multiple end use points. These are also offered with a high capacity auto float drain option.

Models 6102, 6002, 6904 Model 6004

Models 6006 and 6008

How to Order the Filter Assembly*

Build your own custom filter assembly using the guideline matrix below and specify your model number. Example: 1/2” filter with Auto Drain and Grade DX Filter = 6004N-0A1-DX.

*Consult Factory. Not all configurations are available.

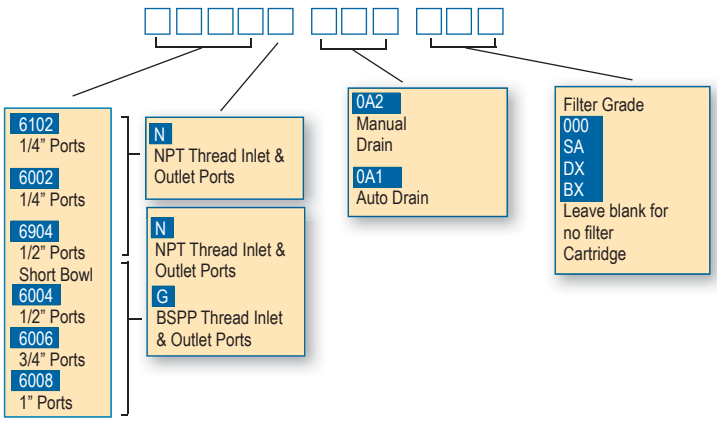

Compressed Air Filters

Stainless Steel Filters for Harsh Environments

Flow Rates

Filter Housing Model	Port Size	Filter Cartridge Grade	Flow rates (SCFM), at 7 psi drop at indicated line pressure (over 3 stages). Refer to Principal Specification Charts in each product data sheet for maximum pressure rating of each housing PSIG								
			2	20	40	80	100	125	150	200	250
6102N	1/4"	DX	3.5	8	11	20	25	30	36	---	---
		BX	1	2	3.5	5.7	6.8	8	10	---	---
6002N	1/4"	DX	9	19	39	51	63	76	90	117	145
6904N	1/2"	BX	3	8	11	21	25	31	36	47	58
		CI	2	5	7	12	15	18	22	28	35
		SA	---	8	11	21	25	31	36	---	---
6004N	1/2"	DX	19	41	65	113	137	166	196	257	316
		BX	9	19	30	51	63	76	90	117	145
		CI	6	12	19	32	39	48	56	73	90
		SA	---	19	30	51	63	76	90	---	---
6006N	3/4"	DX	37	78	123	214	259	315	371	484	596
		BX	10	21	34	56	70	85	101	131	162
		CI	8	16	26	44	53	65	76	99	122
		SA	---	21	34	56	70	85	101	---	---
6008N	1"	DX	55	115	181	314	380	463	546	711	877
		BX	11	23	37	64	77	94	111	144	178
		CI	10	20	32	56	67	82	96	125	154
		SA	---	23	37	64	77	94	111	---	---

Sterile Air Filters

Balston grade SA filter cartridges, rated at 99.9999+% efficiency for 0.01 micron particles, is at least 30 times better than the accepted standard for sterile air filters developed by independent research organizations in the U.S. and U.K. (request bulletin TI-105A for a detailed discussion on Balston filter efficiency rating procedure, and Bulletin TI-935 for an independent test report on balstonSterile Air Filters). Balston Sterile Air Filters are in full compliance with the requirements of the FDA.

Steam Sterilization Procedure

In installations where the sterile air filter requires steam sterilization, we recommend the following procedures:

The steam sterilization pressure should not exceed 60 psig. Preferably, it should be held to 40 psig or less. A typical sterilization cycle is 30 psig steam for 30 minutes. Steaming time can be increased as desired without harm to the filter cartridges. The steam flow should not exceed the normal air flow for the unit. To ensure no buildup of condensate in the housing, condensate should be drained from the filter by a condensate drain valve during the steaming process. The cleanliness of the steam is an important factor influencing the life of the Sterile Air Filter cartridges. Parker strongly recommends using Model 23 Steam Filters to ensure optimum operating life. When autoclaving, the Grade SA filter cartridges will tolerate temperatures to 300°F (149°C) in dry gas. Viton or other heat resistant seals should be used in the housing.

Compressed Air Filters

Stainless Steel Filters for Harsh Environments

Principal Specifications

Model	6102	6002	6904	6004	6006	6008
Port Size	1/4" NPT	1/4" NPT	1/2" NPT	1/2" NPT	3/4" NPT	1" NPT
Materials of Construction						
Head	316 Stainless Steel	304 Stainless Steel →				
Bowl	316 Stainless Steel	304 Stainless Steel →				
Internals	Acetal	Stainless Steel →				
Seals	Viton	Buna-N Food Grade →				
Maximum Temperature	140°F (60°C) (1)	120°F (49°C) (1) →				
Maximum Pressure	150 psig (2)	175 psig (2) →				
Minimum Pressure	15 psig (3)	15 psig (3) →				
Shipping Weight	3.5 lbs.	3.5 lbs.	3.5 lbs.	4.0 lbs.	11 lbs.	12 lbs.
Dimensions	1.5"W x 4.2"L (3.8cm x 11.7cm)	3"W X 7"L (7cm X 18cm)	3"W X 7"L (7cm X 18cm)	3"W X 10"L (7cm X 25cm)	4"W X 10"L (10cm X 25cm)	4"W X 12"L (10cm X 30cm)

Notes:
1 Max. temperature with auto drain Max. temperature with manual drain is 275°F.
2 Max. pressure with auto drain. Max. pressure with manual drain is 250 psi.
3 Required for proper operation of auto drain.

Ordering Information For assistance, call toll-free at 1-800-343-4048 8AM to 5PM Eastern Time

Assembly Ordering Information

Model P/N	Filter Tube	Drain (Manual)	Drain (Auto. Float)	Mounting Bracket (stainless steel)
6102N-0A0-(?X)	070-063-(?X)	SAP05481	N/A	N/A
6102N-0A1-(?X)	070-063-(?X)	N/A	C02-2392	N/A
6002N-0A2-(?X)	100-12-(?X)	C01-0108	N/A	C01-0094
6002N-0A1-(?X)	100-12-(?X)	N/A	C01-0109	C01-0094
6002N-0A2-SA	100-12-SA	C01-0108	N/A	C01-0094
6002N-0A2-000	CI-100-12-000	C01-0108	N/A	C01-0094
6904N-0A2-(?X)	100-12-(?X)	C01-0108	N/A	C01-0094
6904N-0A2-(?X)	100-12-(?X)	N/A	C01-0109	C01-0094
6904N-0A2-SA	100-12-SA	C01-0108	N/A	C01-0094
6904N-0A2-000	CI-100-12-000	C01-0108	N/A	C01-0094
6004N-0A2-(?X)	100-18-(?X)	C01-0108	N/A	C01-0094
6004N-0A1-(?X)	100-18-(?X)	N/A	C01-0109	C01-0094
6004N-0A2-SA	100-18-SA	C01-0108	N/A	C01-0094
6004N-0A2-000	CI-100-18-000	C01-0108	N/A	C01-0094
6006N-0A2-(?X)	200-176-(?X)	C01-0108	N/A	C01-0094
6006N-0A1-(?X)	200-176-(?X)	N/A	C01-0109	C01-0094
6006N-0A2-SA	200-176-SA	C01-0108	N/A	C01-0094
6006N-0A2-000	200-176-000	C01-0108	N/A	C01-0094
6008N-0A2-(?X)	200-185-(?X)	C01-0108	N/A	C01-0094
6008N-0A1-(?X)	200-185-(?X)	N/A	C01-0109	C01-0094
6008N-0A2-SA	200-185-SA	C01-0108	N/A	C01-0094
6008N-0A2-000	200-185-000	C01-0108	N/A	C01-0094

Replacement Filter Cartridge Ordering Information

Model P/N	6102	6002/6904	6004	6006	6008
Replacement Filter Cartridges					
Number required	1	1	1	1	1
Box of 5	5/070-063-(?X)	5/100-12-(?X)	5/100-18-(?X)	5/200-176-(?X)	5/200-185-(?X)
Box of 10	070-063-(?X)	100-12-(?X)	100-18-(?X)	200-176-(?X)	200-185-(?X)
Box of 10	070-063-SA	100-12-SA	100-18-SA	200-176-SA	200-185-SA
CI Cartridges (box of 1)	---	CI100-12-000	CI100-18-000	CI200-176-000	CI200-185-000

Compressed Air Filters

Disposable Filter Silencers

Models 9955-05-DX, 9955-11-DX, 9955-12-DX, AR-009-DX

Balston Filter/Silencers for air exhausts offer the combination of unusually effective sound attenuation and filtration of all visible oil mist from the exhaust air. The Filter/Silencers are available in 1/8", 1/4", 1/2", and 3/4" port sizes. They contain a Grade DX Microfiber Filter Cartridge sealed into a molded nylon or steel holder.

Balston Filter/Silencers are remarkably efficient sound mufflers, far more efficient than the felts, pleated paper, sintered plastic, and sintered metal products commonly used in other exhaust silencers. A sound attenuation efficiency test comparing a 9955-12-DX, 1/2" Filter/Silencer with a sintered polyethylene silencer is described below.

This silencing efficiency test simulates the action of an air cylinder discharging rapidly to atmosphere. A length of 1/2" line between two ball valves is pressurized with air to a controlled pressure. The upstream valve is closed and then the downstream valve is opened rapidly to discharge the fixed volume of air under pressure to atmosphere. Noise levels were measured at a 3 foot distance with no silencer on the end of the line, with the Balston Filter Silencer, and with competitive silencers.

Model 9955-05-DX

Model 9955-11-DX

Model 9955-12-DX

Model AR-009-DX

Noise Level (dBA)	Upstream Pressure (psig) 100	80	60	40	20
Without Silencer	102	102	101	99	95
With Balston Silencer 65	70	70	69	67	
With Sintered Polyethylene Silencer	88	88	87	87	81

A similar test of the Model AR-009-DX on a 3/4" air line gave the following results:

Sound Level 3 ft. from 3/4" Air Line Discharging Air At 100 PSIG Atmosphere	
Without Silencer	With Model AR-009-DX
113 dBA	94 dBA

Compressed Air Filters

Disposable Filter Silencers

Principal Specifications

Model	9955-05-DX	9955-11-DX	9955-12-DX	AR-009-DX
Inlet Port	1/8" NPT (Male)	1/4" NPT (Male)	1/2" NPT (Male)	3/4" NPT (Female)
Drain Port	1/4" OD Tubing	1/4" OD Tubing	1/4" OD Tubing	1/8" NPT (Female)
Materials of Construction				
Filter Cartridge	Borosilicate glass microfibers with fluorocarbon resin binder			
Holder	Nylon	Nylon	Nylon	Aluminum
Internals	—	—	—	Aluminum
Maximum Internal Pressure at 110°F (43°F)	100 psig (1)	100 psig (1)	100 psig (1)	100 psig (1)
Maximum Temp. at 0 psig Internal Pressure	260°F (127°C)	260°F (127°C)	260°F (127°C)	300°F (149°C)
Shipping Weight	0.5 lb (0.2 kg)	0.5 lb (0.2 kg)	0.5 lb (0.2 kg)	1 lb (0.5 kg)
Dimensions	1.4" dia. X 2.0"h (4cm X 5cm)	1.4" dia. X 3.0"h (4cm X 8cm)	2.0" dia. X 3.7"h (5cm X 9cm)	3.95" dia. X 5.13"h (10cm X 13cm)

Notes:

1 With the outlet open to atmosphere. Otherwise, maximum internal pressure is 15 psig.

Ordering Information

For assistance, call toll-free at 1-800-343-4048 8AM to 5PM Eastern Time

Model	Description
9955-05-DX, 9955-11-DX, 9955-12-DX	Standard Pack 10 Filter Silencers per box, individually wrapped
AR-009-DX	Complete Assembly with one filter element
Replacement Element for AR-009-DX	
2/BE200-168-DX	Boxes of 2
BE200-168-DX	Boxes of 10

Flow Rates

	Flow Rate from Pressured Line through Filter to Atmosphere (cu. ft. per sec.)		
Filter Housing Type	100 psig Line Pressure	60 psig Line Pressure	20 psig Line Pressure
9955-05-DX	3	1.2	0.2
9955-11-DX	10	4	0.7
9955-12-DX	35	14	2.2
AR-009-DX	105	42	6.6

Compressed Air Filters

Filter Regulators

Filter-Regulator Combinations

Balston Filter-Regulators combine a high efficiency coalescing filter with a high quality pressure regulator. Air flows through the filter, then to the pressure regulator. The filter is a Balston coalescing compressed air filter (Grade BX) and will completely remove oil, water, and dirt from compressed air and other compressed gases. Flow direction through the element is inside-to-outside for optimum oil and water removal. An automatic drain is installed on the 3/8", 1/2", and 3/4" models offering maintenance-free operation. Pressure gauges are standard and are available in up to 4 different ranges (see ordering information).

AFR-940, AFR-940A

12E Series

Control Characteristics

Model AFR-940, AFR-940A

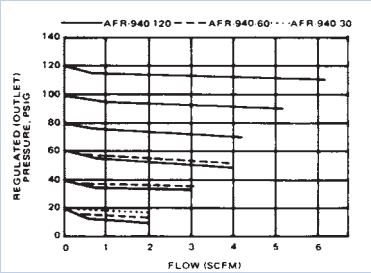

Model 12E

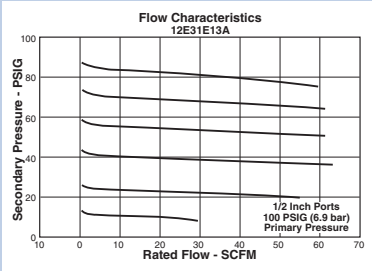

Compressed Air Filters

Filter Regulators

Principal Specifications

Model	AFR-940	AFR-940A	12E27	12E37	12E47
Port Size	1/4" NPT	1/4" NPT	3/8" NPT	1/2" NPT	3/4" NPT
Gauge Ports	1/8" NPT	1/8" NPT	1/4" NPT	1/4" NPT	1/4" NPT
Materials of Construction					
Head	Anod. Alum.	Anod. Alum.	Zinc	Zinc	Zinc
Bowl	Polycarb.	Anod. Alum.	Zinc	Zinc	Zinc
Bonnet	Polycarb.	Polycarb.	Plastic	Plastic	Plastic
Internals	Brass/Buna	Brass/Buna	Zinc/Nitrile	Zinc/Nitrile	Zinc/Nitrile
Maximum Temperature	220°F (104°C)	220°F (104°C)	125°F (52°C)	125°F (52°C)	125°F (52°C)
Maximum Pressure	150 psig (2)	250 psig (2)	250 psig (2)	250 psig (2)	250 psig (2)
Minimum Pressure	—	—	15 psig (1)	15 psig (1)	15 psig (1)
Shipping Weight	0.5 lbs. (0.2 kg)	0.5 lbs. (0.2 kg)	2.5 lbs. (1.1 kg)	2.5 lbs. (1.1 kg)	2.5 lbs. (1.1 kg)
Dimensions	1.2"W X 6"L (3cm X 15cm)	1.2"W X 6"L (3cm X 15cm)	3.25"W X 13"L (8 cm X 33cm)	3.25"W X 13"L (8 cm X 33cm)	3.25"W X 13"L (8cm X 33cm)

Ordering Information

For assistance, call toll-free at 1-800-343-4048 8AM to 5PM Eastern Time

Model	AFR-940	AFR-940A	12E27	12E37	12E47
Control Gauge Pressure Range					
0-30 psig	AFR-940-30	AFR-940A-30	see ordering matrix below	→	→
5-60 psig	AFR-940-60	AFR-940A-60	see ordering matrix below	→	→
10-130 psig	AFR-940-130	AFR-940A-130	see ordering matrix below	→	→
Auto. Drain	N/A (1)	N/A (1)	Included (1)	Included (1)	Included (1)
Replacement Filter Cartridges					
Number Required	1	1	1	1	1
Box of 5	5/050-05-BX	5/050-05-BX	5/130-14-BX	5/130-14-BX	5/130-14-BX
Box or 10	050-05-BX	050-05-BX	130-14-BX	130-14-BX	130-14-BX
Mounting Bracket	11536	11536	PS807P	PS807P	PS807P

Notes:

1 Minimum operating pressure for automatic drain is 15 psig.
2 Maximum pressure ratings are for temperatures to 130°F (54°C). Please consult the factory for maximum pressure ratings at elevated temperatures.

How to Order

To order product with desired port size and Regulating Pressure Range, select the indicator digits from the matrix (at right). This will complete the entire model number which is needed to place an order.

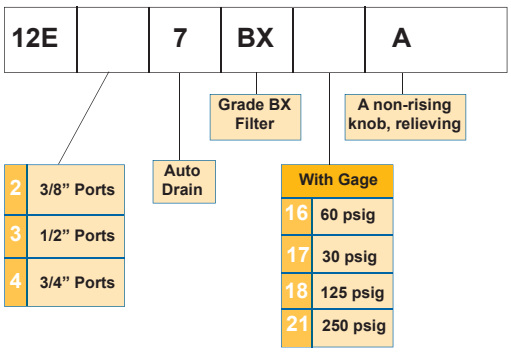

Compressed Air Filters

Mist Lubricators

Model 17L Series

Many pneumatic system components and most tools require oil lubrication for proper operation and long service life. This lubricant is typically carried by the air stream. Too little oil can cause excessive wear and premature failure. Too much oil is wasteful and can become a contaminant. Use of the proper lubricator can greatly extend the life of expensive downstream pneumatic equipment.

The 17L Series Micro-Mist Lubricators offer proportional oil delivery over a wide range of air flows. The precision needle valve assures repeatable oil delivery and provides simple adjustment of delivery rate. They are designed to generate oil droplets of 5 microns or smaller downstream to lubricate systems having complex piping arrangements. The 17L series are ideal for low and high flow applications with changing air flow.

17L Series

How to Select the Correct Lubricator

Once the required flow is determined for a pneumatic application, the lubricator can be selected by using the flow chart. To read the lubricator flow chart, first determine the inlet pressure that will be used. Find the appropriate pressure curve on the graph. Each graph will contain three pressure curves. If the required inlet pressure is not on the graph, interpolate a similar curve for the required pressure.

Next, determine the acceptable pressure drop across the lubricator and locate it on the vertical axis. Find the intersection point of the acceptable pressure drop and the inlet pressure curve. At this point, follow a vertical path downward to view the flow in SCFM. If the flow is too low, select a larger port size or body size to give the required flow. If the flow is higher than necessary, select a smaller port size or body size to give the required flow.

Model 17L22B

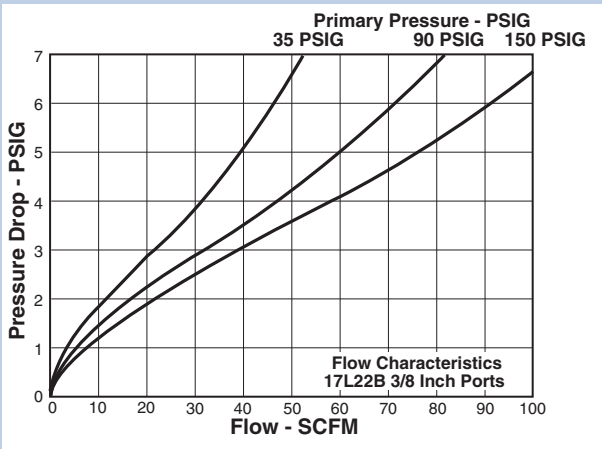

Model 17L32B and 17L42B

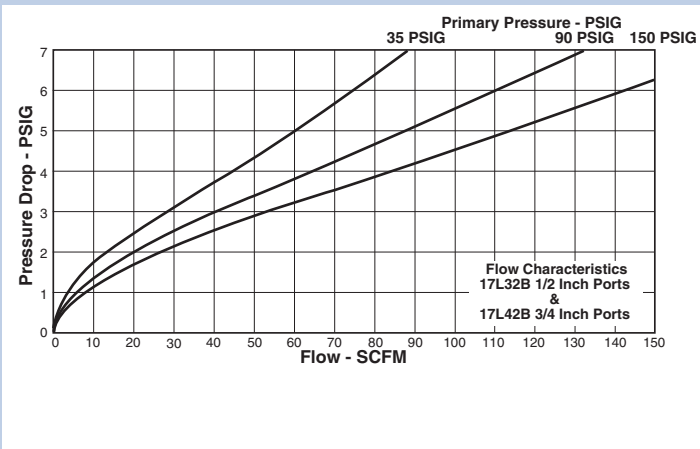

Compressed Air Filters

Mist Lubricators

Principal Specifications

Model	17L22BE	17L32BE	17L42BE
Port Size	3/8" NPT	1/2" NPT	3/4" NPT
Gauge Ports	1/4" NPT	1/4" NPT	1/4" NPT
Materials of Construction			
Head	Zinc	Zinc	Zinc
Bowl	Polycarbonate	Polycarbonate	Polycarbonate
Bowl Guard	Steel	Steel	Steel
Collar	Plastic	Plastic	Plastic
Seal	Nitrile	Nitrile	Nitrile
Sight Dome	Polycarbonate	Polycarbonate	Polycarbonate
Sight Gage	Polyamide	Polyamide	Polyamide
Maximum Temperature	125°F (52°C)	125°F (52°C)	125°F (52°C)
Maximum Pressure	150 psig	150 psig	150 psig
Minimum Pressure	15 psig	15 psig	15 psig
Shipping Weight	1.9 lbs. (0.9 kg)	1.9 lbs. (0.9 kg)	1.9 lbs. (0.9 kg)
Dimensions	3.25"W X 9.27"L (85mm X 235mm)	3.25"W X 9.27"L (85mm X 235mm)	3.25"W X 9.27"L (85mm X 235mm)

Ordering Information

For assistance, call toll-free at 1-800-343-4048 8AM to 5PM Eastern Time

Model	17L22BE (3/8"NPT)	17L32BE (1/2"NPT)	17L42BE (3/4"NPT)
Service Kit	PS748P	PS748P	PS748P

Compressed Air Filters

Selection Chart Prep-Air® II Air Preparation Units

Product Selection Chart

Basic Unit	Series	Port Size (inches)											Bowls			Capacity	Elements (Micron)	Page
		1/8	1/4	3/8	1/2	3/4	1	1-1/4	1-1/2	2	2-1/2	3	Poly	Metal	Metal SG		5	
FILTERS	FF10				X								316 Stainless Steel			4 oz.	Standard	29
	10F	X	X										X	X	X	1 oz.	Grade 6 Std., Grade 10 Opt.	31
COALESCERS	FF501		X										316 Stainless Steel			1 oz.	Grade 6	33
	FF11				X								316 Stainless Steel			4 oz.	Grade 6	35

Basic Unit		Series	Port Size (inches)							Spring	Page
			1/8	1/4	3/8	1/2	3/4	1	1-1/2	125	
REGULATORS	STANDARD	FR364		X						Standard	37
		05R		X	X					Standard	39
		FR10				X				Standard	41
		07R			X	X	X			Standard	43
		P3NR					X	X	X	Standard	45

*Sight gauge

Compressed Air Filters

Selection Chart Prep-Air® II Air Preparation Units

Product Selection Chart

Basic Unit	Series	Port Size							Bowls			Capacity	Elements (Micron)	Spring Range	Page
		1/8	1/4	3/8	1/2	3/4	1	1-1/2	Poly	Metal	Metal SG		5	125	
FILTER/REGULATORS	14E	X	X						X	X	N/A	1 oz.	Standard	Standard	47
	FB548		X						316 Stainless Steel			1 oz.	Standard	Standard	49
	06E		X	X	X				X	X	X	4.4 oz.	Standard	Standard	51
	FB11				X				316 Stainless Steel			4 oz.	Standard	Standard	53

*Sight gauge

Compressed Air Filters

Air Preparation Units - Drains

Automatic Pulse Drain

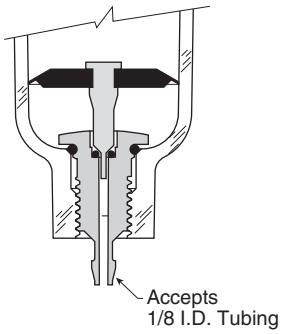

(Spitter Drain)
The diaphragm in this drain pulses when there is a pressure differential such as a valve cycling or cylinder stroking downstream. This action flexes the diaphragm and allows the filter to drain the entrapped water.

Automatic Float Drain

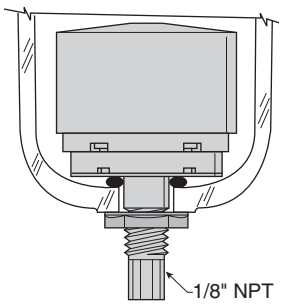

The float internal to this drain rises with increased liquid level. When the float rises, it opens a seat area allowing the trapped liquids to drain through the bottom.
A manual override can be pushed in the bottom of the drain to unseat the float if particulates create a block.

Compressed Air Filters

Air Preparation Units - FF10 Filter - Standard 1/2" NPT Ports

Features
- Stainless steel construction handles most corrosive environments.
- Meets NACE specifications MR-01-75/ISO 15156.
- 1/8" female threaded drain.
- High Flow: 1/2" - 70 SCFM §

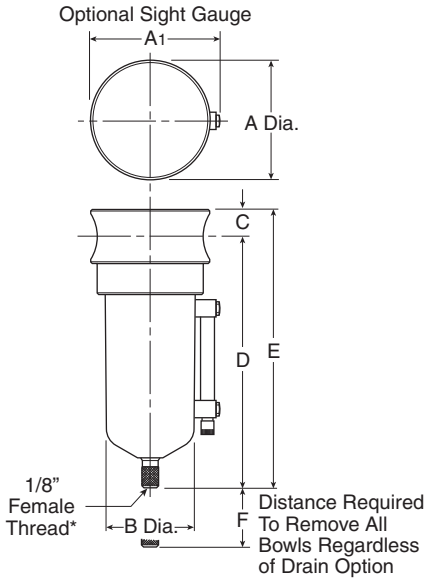

Port Size	NPT without sight gauge		NPT with sight gauge	
	Manual Twist Drain	Automatic Float Drain	Manual Twist Drain	Automatic Float Drain
1/2"	FF10-04DGSS	FF10-04DGRSS	FF10-04WGSS	FF10-04WGRSS

§ SCFM = Standard cubic feet per minute at 90 PSIG inlet and 5 PSIG pressure drop.

F10 Filter Dimensions		
A 2.38 (60)	A1 2.50 (64)	B 1.75 (44)
C .56 (14)	D 5.00 (127)	E 5.56 (141)
F 2.12 (54)		

inches (mm)

Ordering Information

FF10	-	04	W	G		SS

Port Type	Port Size	Bowl	Element	Options	Material
- NPT	04 1/2 Inch	D Metal Bowl without Sight Gauge W Metal Bowl with Sight Gauge	G 5 Micron	Blank Manual Twist Drain R Automatic Float Drain	SS Stainless Steel

Compressed Air Filters

Air Preparation Units - FF10 Air Line Filters
Technical Information

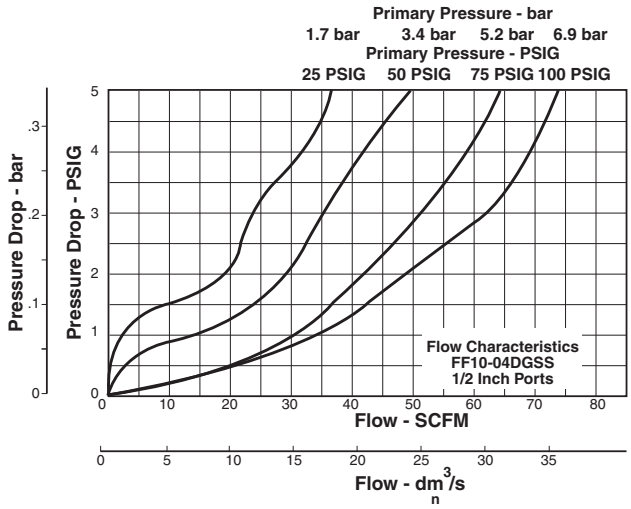

FF10 Filter Kits & Accessories

Drain Kit –
- Automatic Float Drain SA602MDSS
- Manual Twist Drain–
  - Small (Old) SA600Y7-1SS
  - Large (New) SAP05481

Filter Element Kits –
- Particulate (5 Micron) Element EK55G

Pipe Nipple – 1/2" 316 Stainless Steel 616A28-SS

Specifications

Bowl Capacity ..... 4.0 Ounces
Filter Rating ..... 5 Micron
Sump Capacity ..... 1.7 Ounce
Port Threads ..... 1/2 Inch
Pressure & Temperature Ratings –
- Manual Twist Drain (D-Bowl) ..... 0 to 300 PSIG (0 to 20.7 bar)
  0°F to 180°F (-18°C to 82°C)
- Manual Twist Drain (W-Bowl) ..... 0 to 250 PSIG (0 to 17.2 bar)
  0°F to 150°F (-18°C to 66°C)
- Automatic Float Drain ..... 15 to 175 PSIG (1 to 12 bar)
  40°F to 125°F (4°C to 52°C)

Note: Air must be dry enough to avoid ice formation at temperatures below 32°F (2°C).

Weight ..... 1.9 lb. (0.85 kg)

Materials of Construction

Body ..... 316 Stainless Steel
Bowls ..... 316 Stainless Steel
Deflector ..... Acetal
Drain ..... 316 Stainless Steel
Element Holder ..... Acetal
Filter Element ..... Polyethylene
Seals ..... Fluorocarbon
Sight Gauge ..... Isoplast

Compressed Air Filters

Air Preparation Units - 10F Coalescing Filters - Miniature 1/8", 1/4" Basic 1/8" Body

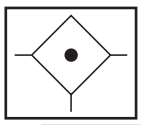

Features

- Removes liquid aerosols and sub-micron particles.
- Liquids gravitate to the bottom of the element and will not re-enter the airstream.
- Oil free air for critical applications, such as air gauging and pneumatic instrumentation and controls.
- Interchangeable twist and automatic pulse drains.
- Grade 6 element, 99.97% DOP efficiency.
- High Flow: Grade 6 Element
  1/8" – 17 SCFM §
  1/4" – 20 SCFM §
  Grade 10 Element
  1/8" – 19 SCFM §
  1/4" – 24 SCFM §

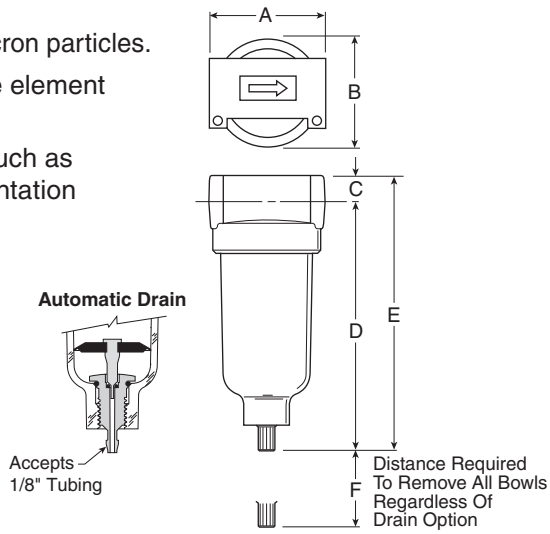

Port Size	NPT	
	Twist Drain	Automatic Pulse Drain
Poly Bowl ‡		
1/8"	**10F01E***	**10F05E***
1/4"	**10F11E***	**10F15E***
Metal Bowl without Sight Gauge		
1/8"	**10F03E***	**10F07E***
1/4"	**10F13E***	**10F17E***

Standard part numbers shown bold, with Grade 6 Elements (for Grade 10 Elements, replace "E" with "H" in the 6th position). For other models refer to ordering information below.

‡ For polycarbonate bowl see Caution on page 2.

§ SCFM = Standard cubic feet per minute at 90 PSIG inlet and 5 PSIG pressure drop.

10F Coalescing Filter Dimensions

A	B	C
1.69 (43)	1.56 (39,6)	0.39 (10)
D	**D†**	**E**
3.82 (97)	3.67 (93)	4.21 (107)
E†	**F**	
4.06 (103)	1.60 (41)	

Inches (mm)

† With Automatic Pulse Drain.

Ordering Information

10F	1	1	E	*	—

Port Size
- **0 1/8 Inch**
- **1 1/4 Inch**

Bowl Options
- Polycarbonate Bowl
- **1 Twist Drain**
- **5 Automatic Pulse Drain**
- Metal Bowl
- **3 Twist Drain**
- **7 Automatic Pulse Drain**

Elements
- **E Grade 6**
- H Grade 10

Engineering Level
- * Will be Entered at Factory

Port Type
- **Blank NPT**
- 1 BSPP
- 2 BSPT

Compressed Air Filters

Air Preparation Units - 10F Coalescing Filters

Technical Information

Grade 6

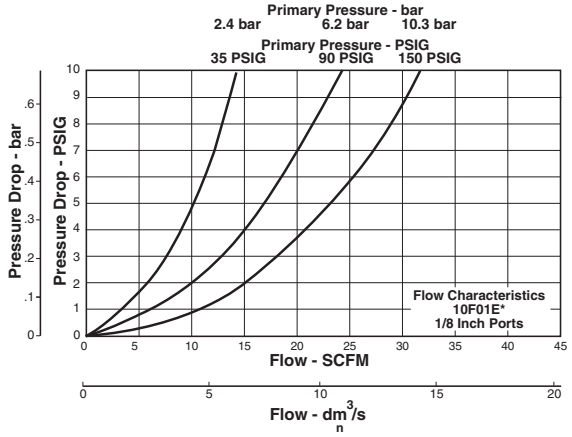

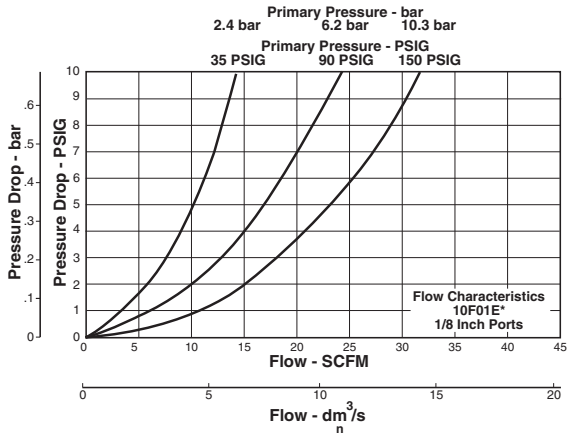

Grade 10

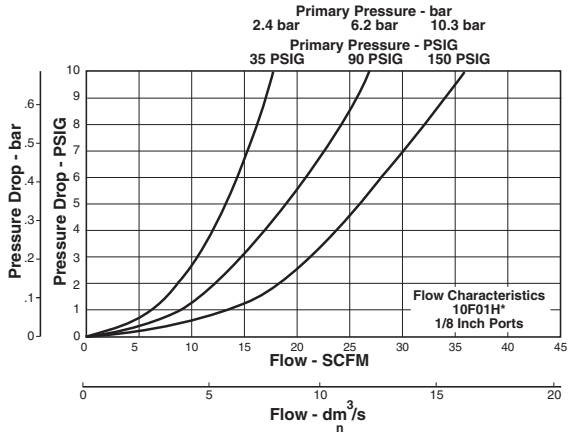

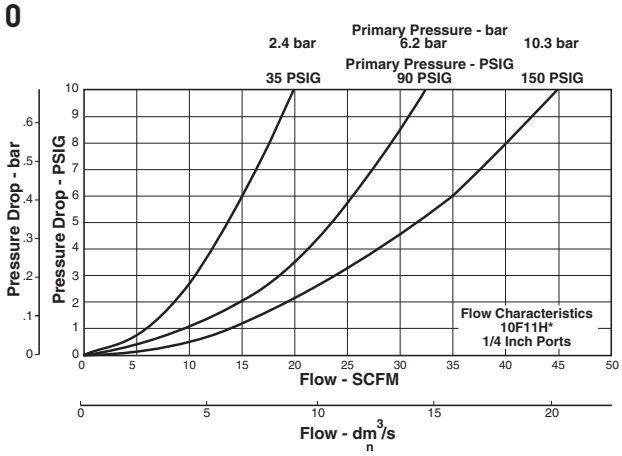

10F Coalescing Filter Kits & Accessories

Bowl Kits –
- Poly Bowl – Automatic Pulse Drain PS408BP
  - Twist Drain PS404P
- Metal Bowl – Automatic Pulse Drain PS451BP
  - Twist Drain PS447BP

Filter Element Kits – Grade 6 (Standard) PS446P
- Grade 10 (Optional) PS456P

Mounting Bracket Kit PS417BP

Specifications

Automatic Pulse Drain Tube Barb ..... 1/8 Inch

Bowl Capacity ..... 1 Ounce

Operation –
- Normal Operating Pressure Drop ..... 2 PSIG
- Maximum Recommended Pressure Drop ..... 10 PSIG (Element should be replaced)

Port Threads ..... 1/8, 1/4 Inch

Pressure & Temperature Ratings –
- Polycarbonate Bowl ..... 0 to 150 PSIG (0 to 10.3 bar) 32°F to 125°F (0°C to 52°C)
- Metal Bowl ..... 0 to 250 PSIG (0 to 17.2 bar) 32°F to 175°F (0°C to 80°C)
- Automatic Pulse Drain ..... 10 to 250 PSIG (0.7 to 17.2 bar) at 125°F (52°C) or less

Weight ..... 0.41 lb. (0.18 kg)

Materials of Construction

Body ..... Zinc

Bowls ..... Transparent Polycarbonate
Metal (Zinc) Without Sight Gauge

Drains – Twist Drain –
- Body & Stem ..... Plastic
- Seals ..... Nitrile

Automatic Pulse Drain –
- Piston & Seals ..... Nitrile
- Stem, Seat, Adaptor & Washers ..... Aluminum

Element Holder ..... Plastic

Filter Element –
- Borosilicate & felt glass fibers 99.97% DOP efficiency
- Largest Aerosol Particle Passed (Grade 6) ..... 0.01 Micron
- Largest Solid Particle Passed (Grade 6) ..... 0.30 Micron

Seals ..... Nitrile

Compressed Air Filters

Air Preparation Units

FF501 Coalescing Filter - Miniature 1/4” Ports

Features

- Stainless steel construction handles most corrosive environments.
- Meets NACE specifications MR-01-75/ISO 15156.
- 1/8" female threaded drain*.
- High Flow: 1/4" - 16 SCFM §

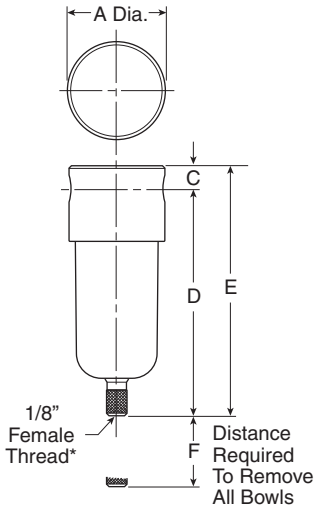

Port Size	NPT
	Manual Twist Drain
1/4"	**FF501-02DHSS**

Standard part numbers shown bold. For other models refer to ordering information below.

SCFM = Standard cubic feet per minute at 90 PSIG inlet and 5 PSIG pressure drop.

F501 Coalescing Filter Dimensions		
A 1.56 (40)	C 0.31 (8)	D 3.69 (94)
E 4.00 (102)	F 1.58 (40)	

inches
(mm)

Ordering Information

FF501	-	02	D	H	SS

Port Type	Port Size	Bowl	Element	Material
- NPT	02 1/4 Inch	D Metal Bowl without Sight Gauge	H .3 Micron	SS Stainless Steel

Compressed Air Filters

Air Preparation Units - F501 Series Technical Information

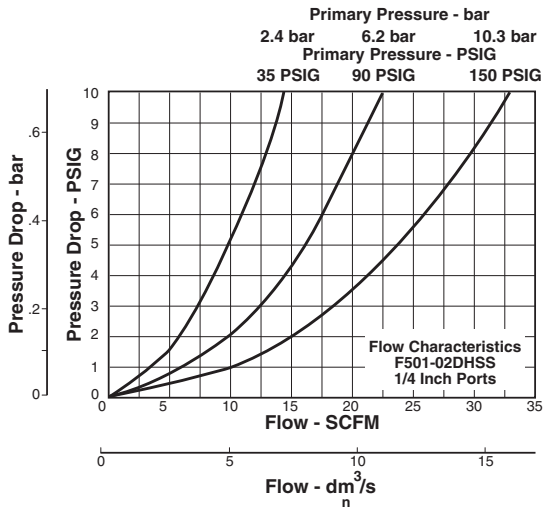

FF501 Filter Kits & Accessories

Filter Element Kits –
0.3 Micron EKF31
Manual Twist Drain –
Small (Old) SA600Y7-1SS
Large (New) SAP05481
Pipe Nipple –
1/4" 316 Stainless Steel 616Y28-SS

Specifications

Bowl Capacity ..... 1.0 Ounces
Filter Rating ..... 0.3 Micron
Port Threads ..... 1/4 Inch
Pressure & Temperature Ratings –
Manual Twist Drain ..... 0 to 300 PSIG (0 to 20.7 bar)
0°F to 180°F (-18°C to 82°C)
Note: Air must be dry enough to avoid ice formation at temperatures below 32°F (2°C)
Sump Capacity ..... 0.4 Ounce
Weight ..... 0.6 lb. (0.27 kg)

Materials of Construction

Body ..... 316 Stainless Steel
Bowls ..... 316 Stainless Steel
Drain .....
316 Stainless Steel
Element Holder ..... Acetal
Filter Element ..... Borosilicate Fiber
Seals ..... Fluorocarbon

Compressed Air Filters

Air Preparation Units - FF11 Coalescing Filter Standard 1/2" Ports

Features

- Stainless steel construction handles most corrosive environments.
- Meets NACE specifications MR-01-75/ISO 15156.
- 1/8" female threaded drain*.
- High Flow: 1/2" - 45 SCFM §

* Beginning January 2008

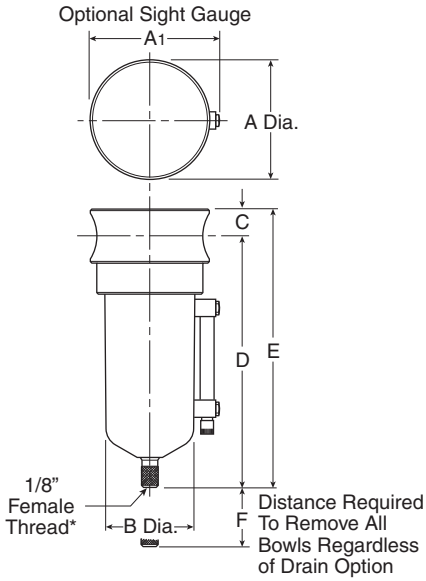

Port Size	NPT without sight gauge		NPT with sight gauge	
	Manual Twist Drain	Automatic Float Drain	Manual Twist Drain	Automatic Float Drain
1/2"	Metal Bowl With Sight Gauge			
	F11-04DJSS	**F11-04DJRSS**	F11G04WJSS	F11G04WJRSS

Standard part numbers shown bold. For other models refer to ordering information below.

§ SCFM = Standard cubic feet per minute at 90 PSIG inlet and 5 PSIG pressure drop.

F11 Coalescing Filter Dimensions		
A 2.38 (60)	A1 2.50 (64)	B 1.75 (44)
C 0.56 (14)	D 5.00 (127)	E 5.56 (141)
F 2.12 (54)		

inches (mm)

Ordering Information

FF11	-	04	W	J		SS

Port Type
- **- NPT**
- G BSPP

Port Size
- **04 1/2 Inch**

Bowl
- D Metal Bowl without Sight Gauge
- **W Metal Bowl with Sight Gauge**

Element
- **J .01 Micron**

Options
- **Blank Manual Twist Drain**
- R Automatic Float Drain

Material
- **SS Stainless Steel**

Compressed Air Filters

Air Preparation Units - FF11 Series Technical Information

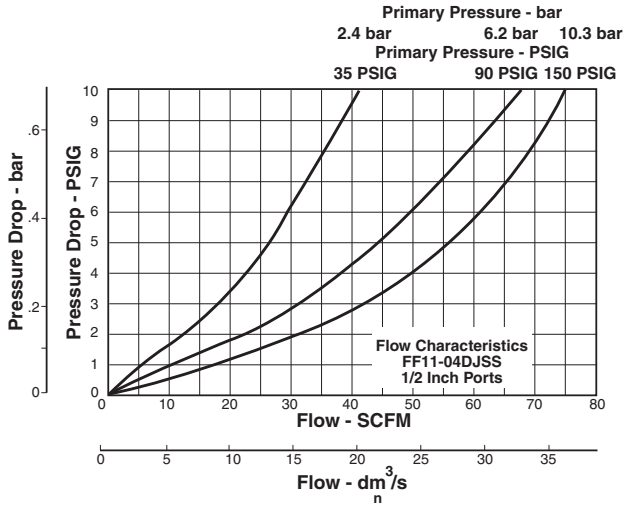

F11 Filter Kits & Accessories

Drain Kit –
- Automatic Float Drain SA602MDSS
- Manual Twist Drain–
  - Small (Old) SA600Y7-1SS
  - Large (New) SAP05481

Filter Element Kits –
- 0.3 Micron EKF71

Pipe Nipple –
- 1/2" 316 Stainless Steel 616A28-SS

Specifications

Bowl Capacity ..... 4.0 Ounces
Filter Rating ..... 0.01 Micron
Sump Capacity ..... 1.7 Ounce
Port Threads ..... 1/2 Inch
Pressure & Temperature Ratings –
- Manual Twist Drain ..... 0 to 300 PSIG (0 to 20.7 bar)
  0°F to 180°F (-18°C to 82°C)
- Manual Twist Drain (W) ..... 0 to 250 PSIG (0 to 17.2 bar)
  0°F to 150°F (-18°C to 66°C)
- Automatic Float Drain ..... 0 to 175 PSIG (0 to 12 bar)
  40°F to 125°F (4°C to 52°C)

Note: Air must be dry enough to avoid ice formation at temperatures below 32°F (2°C).
Weight ..... 1.9 lb. (0.85 kg)

Materials of Construction

Body ..... 316 Stainless Steel
Bowls ..... 316 Stainless Steel
Drain ..... 316 Stainless Steel
Element Holder ..... Acetal
Filter Element ..... Borosilicate Fiber
Seals ..... Fluorocarbon
Sight Gauge ..... Isoplast

FF11 Media Specifications

Grade Designation	Coalescing Efficiency 0.3 to 0.6 Micron Particles	Maximum Oil Carryover[1] PPM w/w	Micron Rating	Pressure Drop (PSID) @ Rated Flow[2]		Flow: SCFM @3 PSID Operating Pressure 100 PSIG
				Media Dry	Media Wet With 10-20 wt. oil	
6	99.97%	0.008	0.01	1.0	2-3	??
10	95%	0.85	1.0	0.5	0.5	??

[1]Tested per ISO 12500-1 at 40 ppm inlet.
[2]Add dry + wet for total pressure drop.

Compressed Air Filters

Air Preparation Units - FR364 Regulator -Miniature 1/4" Ports

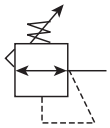

R364

Features

- Stainless steel construction handles most corrosive environments.
- Large diaphragm to valve area ratio for precise regulation and high flow capacity.
- Meets NACE specifications MR-01-75/ISO 15156.
- High Flow: 1/4" – 12 SCFM§

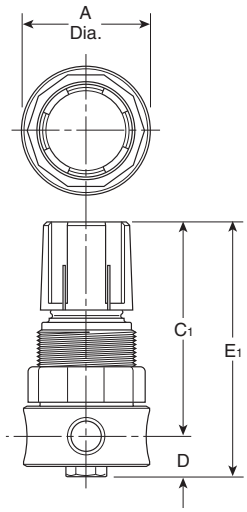

R364

Series	Adjustment Type	Port Size	NPT
FR364	Knob	1/4"	R364-02CSS

§ SCFM = Standard cubic feet per minute at 100 PSIG inlet, 75 PSIG no flow secondary setting and 15 PSIG pressure drop.

R364 Regulator Dimensions	
A 1.56 (40)	C_1 2.56 (65)
D 0.50 (13)	E_1 3.06 (78)

inches (mm)

NOTE: 1.25 Dia. (32mm) hole required for panel mounting.

⚠ WARNING

Product rupture can cause serious injury.
Do not connect regulator to bottled gas.
Do not exceed maximum primary pressure rating.

Ordering Information

FR364	-	02	C	SS

Series	Port Type	Port Size	Pressure Range	Material
R364 Standard Knob	- NPT	02 1/4 Inch	C 0-125 PSIG (0-8.5 bar)	SS Stainless Steel

Compressed Air Filters

Air Preparation Units FR364 Air Line Regulators
Technical Information

Operation

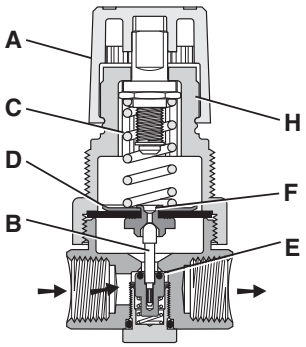

FR364

With the adjusting knob (A) turned fully counter-clockwise (no spring load), and pressure supplied to the regulator inlet port, the valve poppet assembly (B) is closed. Turning the adjusting knob clockwise applies a load to control spring (C). This load causes the diaphragm (D) and the valve poppet assembly (B) to move downward allowing flow across the seat area (E) created between the poppet assembly and the seat. Pressure in the downstream line is sensed below the diaphragm (D) and offsets the load of spring (C). As downstream pressure rises, poppet assembly (B) and diaphragm (D) move upward until the area (E) is closed and the load of the spring (C) and pressure under diaphragm (D) are in balance. A reduced outlet pressure has now been obtained, depending on spring load. Creating a demand downstream, such as opening a valve, results in a reduced pressure under the diaphragm (D). The load of control spring (C) now causes the poppet assembly to move downward opening seat area (E) allowing air to flow to meet the downstream demand. The flow of downstream air is metered by the amount of opening (E).
Should downstream pressure exceed the desired regulated pressure, the excess pressure will cause the diaphragm (D) to move upward against control spring (C), open vent hole (F), and vent the excess pressure to atmosphere through the hole in the bonnet (H). (This occurs in the relieving type regulator only.)

Technical Information

CAUTION:

REGULATOR PRESSURE ADJUSTMENT –
The working range of knob adjustment is designed to permit outlet pressures within their full range. Pressure adjustment beyond this range is also possible because the knob is not a limiting device. This is a common characteristic of most industrial regulators, and limiting devices may be obtained only by special design.

For best performance, regulated pressure should always be set by increasing the pressure up to the desired setting.

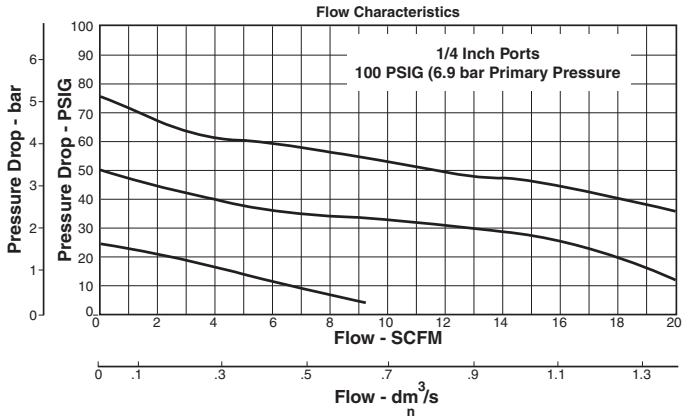

FR364 Regulator Kits & Accessories

R364 Bonnet Kit (Knob Included) CKR364YSS
Gauge –
160 PSIG (0 to 1100 kPa) K4515N14160SS
Panel Mount Bracket (Stainless) 161X57-SS
Panel Mount Nut –
Stainless R05X51-SS
Plastic R05X51-P
Service Kit –
Relieving RKR364YSS

Springs –
0-125 PSIG Range SPR-377-1-SS

Specifications

Gauge Port ..... 1/4 Inch
Operation ..... Fluorocarbon Diaphragm
Port Threads ..... 1/4 Inch
Pressure & Temperature Ratings – ..... 300 PSIG Max (20.7 bar)
40°F to 150°F (4°C to 66°C)
Weight ..... 0.5 lb. (0.23 kg)

Materials of Construction

Adjustment Mechanism / Springs ..... 316 Stainless Steel
Adjusting Knob (R364) ..... Polypropylene
Body ..... 316 Stainless Steel
Bonnet (R364) ..... Acetal
Bottom Plug ..... 316 Stainless Steel
Poppet ..... 316 Stainless Steel
Seals ..... Fluorocarbon

Compressed Air Filters

Air Preparation Units - 05R Regulators - Economy 1/4", 3/8" NPT - Basic 1/4" Body

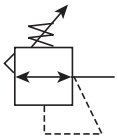

Features

- Secondary aspiration plus balanced poppet provides quick response and accurate pressure regulation.
- Rolling diaphragm for extended life.
- Removable non-rising knob for panel mounting and tamper resistance.
- Easily serviced.
- Reverse Flow.
- High Flow: 1/4" – 30 SCFM§
  3/8" – 40 SCFM§

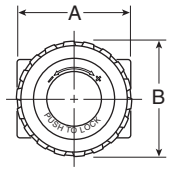

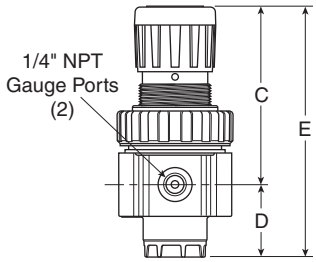

Port Size	NPT
Without Gauge	
1/4"	**05R113A***
3/8"	**05R213A***
With 160 PSI Gauge	
1/4"	**05R118A***
3/8"	**05R218A***

NOTE: 1.53 Dia. (39mm) hole required for panel mounting.

§ SCFM = Standard cubic feet per minute at 100 PSIG inlet, 90 PSIG no flow secondary setting and 10 PSIG pressure drop.

05R Regulator Dimensions		
A 2.00 (51)	B 2.06 (52)	C 3.16 (80)
D 1.28 (32)	E 4.44 (113)	

Inches (mm)

Ordering Information

05R	1	13	A	*	—	—	---

Port Size
1 1/4 Inch
2 3/8 Inch

Pressure Range
Without Gauge
13 125 PSIG
With Gauge**
18 125 PSIG

** Includes 1-1/2" Dial Face Gauge

Relief
A Relieving

Engineering Level
* Will be Entered at Factory

Port Type
Blank NPT

* 1/4 & 3/8 inch meet ISO 1179-1 Standard.

Options
Blank No Options

† Inlet Pressure is 100 PSIG. For other pressures, contact factory.

Preset / Pressure Limited
Blank None

Compressed Air Filters

Air Preparation Units 05R Air Line Regulators
Technical Information

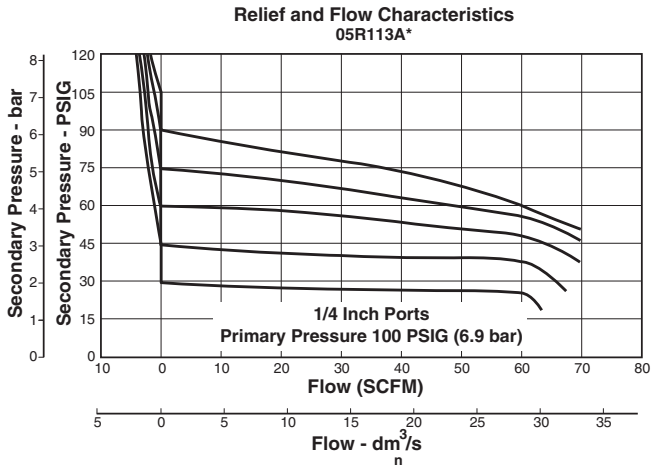

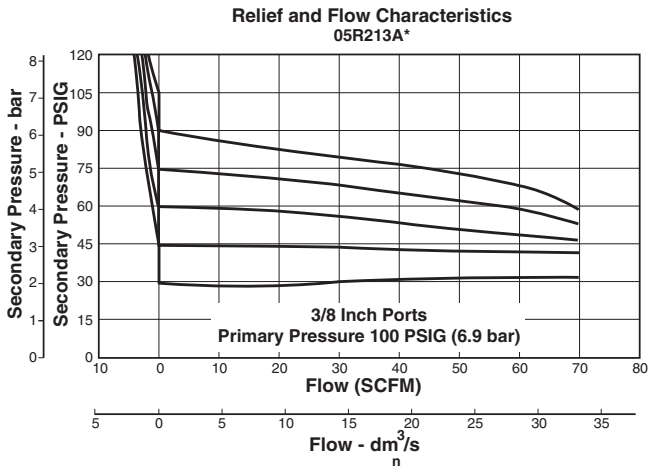

CAUTION:

REGULATOR PRESSURE ADJUSTMENT – The working range of knob adjustment is designed to permit outlet pressures within their full range. Pressure adjustment beyond this range is also possible because the knob is not a limiting device. This is a common characteristic of most industrial regulators, and limiting devices may be obtained only by special design.

For best performance, regulated pressure should always be set by increasing the pressure up to the desired setting.

⚠ WARNING

Product rupture can cause serious injury.
Do not connect regulator to bottled gas.
Do not exceed maximum primary pressure rating.

05R Regulator Kits & Accessories

Bonnet Assembly Kit PS915P
Control Knob P04420
Gauges – 1-1/2" Dial Face ????
30 PSIG (0 to 2.1 bar) K4515N14030
60 PSIG (0 to 4.1 bar) K4515N14060
160 PSIG (0 to 11.0 bar) K4515N14160
300 PSIG (0 to 20.0 bar) K4515N14300
2" Dial Face
60 PSIG (0 to 4.1 bar) K4520N14060
160 PSIG (0 to 11.0 bar) K4520N14160

Mounting Bracket Kit PS963P
Panel Mount Nut – Metal PS964P
Springs – 1-30 PSIG Range P04427
1-60 PSIG Range P04426
2-125 PSIG Range P04425
2-200 PSIG P02934
Service Kit – Relieving PS908P

Specifications

Gauge Ports (2) ..... 1/4 Inch
Port Threads ..... 1/4, 3/8 Inch
Primary Pressure Rating –
Maximum Primary Pressure ..... 250 PSIG (17.2 bar) Max.
For Secondary Pressure Ranges see above charts.
Temperature Rating ..... 32°F to 175°F (0°C to 80°C)
Low Temperature ..... -4°F to 125°F (-20°C to 52°C)
Weight ..... 1.1 lb. (0.49 kg)

Materials of Construction

Adjusting Stem ..... Brass
Bonnet ..... Plastic
Body ..... Zinc
Collar, Knob ..... Plastic
Diaphragm ..... Nitrile
Poppet & Cap ..... Plastic
Seals ..... Nitrile
Springs – Poppet & Control ..... Steel

Compressed Air Filters

Air Preparation Units - FR10 Regulator - Standard 1/2" Ports

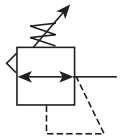

R10

Features

- Stainless steel construction handles most corrosive environments.
- Large diaphragm to valve area ratio for precise regulation and high flow capacity.
- Meets NACE specifications MR-01-75/ISO 15156.
- Low temperature version available.
- High Flow: 1/2" – 80 SCFM§

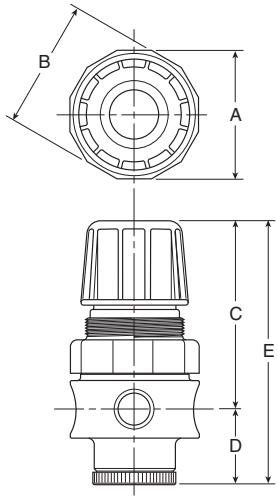

R10

Port Size	NPT
1/2"	FR10-04CSS

§ SCFM = Standard cubic feet per minute at 100 PSIG inlet, 75 PSIG no flow secondary setting and 15 PSIG pressure drop.

R10, R11 Regulator Dimensions		
A 2.34 (60)	B 2.43 (62)	C 3.59 (91)
D 1.38 (35)	E 4.97 (126)	

inches (mm)
NOTE: 1.75 Dia. (44mm) hole required for panel mounting.

⚠ WARNING

Product rupture can cause serious injury.
Do not connect regulator to bottled gas.
Do not exceed maximum primary pressure rating.

Ordering Information

FR10	-	04	C	SS

Series	Port Type	Port Size	Pressure Range	Material
R10 Standard Knob	- NPT	04 1/2 Inch	C 0-125 PSIG (0-8.5 bar)	SS Stainless Steel

Compressed Air Filters

Air Preparation Units FR10 Air Line Regulators

Technical Information

Operation

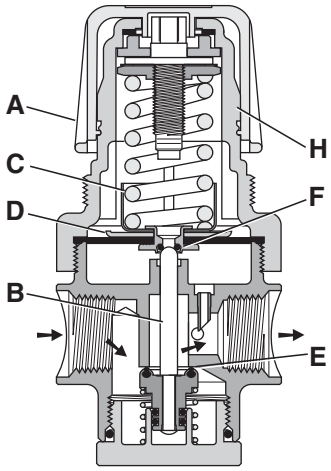

With the adjusting knob **(A)** turned fully counter-clockwise (no spring load), and pressure supplied to the regulator inlet port, the valve poppet assembly **(B)** is closed. Turning the adjusting knob clockwise applies a load to control spring **(C)**. This load causes the diaphragm **(D)** and the valve poppet assembly **(B)** to move downward allowing flow across the seat area **(E)** created between the poppet assembly and the seat. Pressure in the downstream line is sensed below the diaphragm **(D)** and offsets the load of spring **(C)**. As downstream pressure rises, poppet assembly **(B)** and diaphragm **(D)** move upward until the area **(E)** is closed and the load of the spring **(C)** and pressure under diaphragm **(D)** are in balance. A reduced outlet pressure has now been obtained, depending on spring load. Creating a demand downstream, such as opening a valve, results in a reduced pressure under the diaphragm **(D)**. The load of control spring **(C)** now causes the poppet assembly to move downward opening seat area **(E)** allowing air to flow to meet the downstream demand. The flow of downstream air is metered by the amount of opening **(E)**.

Should downstream pressure exceed the desired regulated pressure, the excess pressure will cause the diaphragm **(D)** to move upward against control spring **(C)**, open vent hole **(F)**, and vent the excess pressure to atmosphere through the hole in the bonnet **(H)**. (This occurs in the relieving type regulator only.)

Technical Information

CAUTION:

REGULATOR PRESSURE ADJUSTMENT –

The working range of knob adjustment is designed to permit outlet pressures within their full range. Pressure adjustment beyond this range is also possible because the knob is not a limiting device. This is a common characteristic of most industrial regulators, and limiting devices may be obtained only by special design.

For best performance, regulated pressure should always be set by increasing the pressure up to the desired setting.

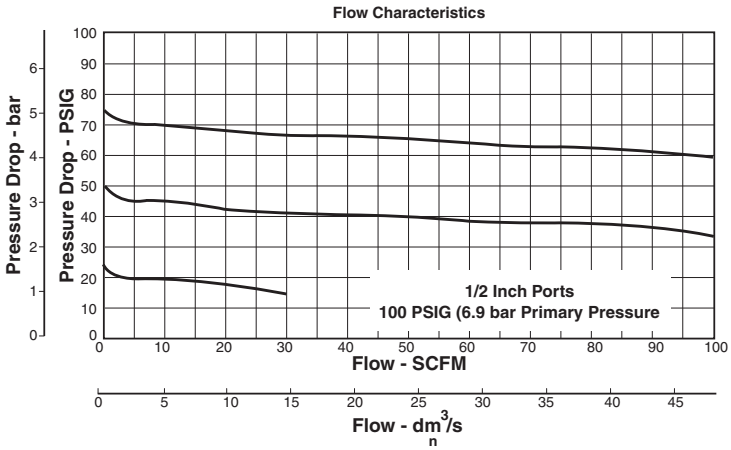

FR10 Regulator Kits & Accessories

R10 Bonnet Kit (Knob Included) CKR10YSS
Gauge –
160 PSIG (0 to 1100 kPa), 2" Face K4520N14160SS
Panel Mount Bracket (Stainless) 161X57-SS
Panel Mount Nut –
Stainless R10X51-SS
Plastic R10X51-P
Service Kit –
Relieving RKR10YSS

Springs –
0-125 PSIG Range SPR-389-1-SS

Specifications

Gauge Port ..... 1/4 Inch
Operation ..... Fluorocarbon Diaphragm
Port Threads ..... 1/2 Inch
Pressure & Temperature Ratings – ..... 300 PSIG Max (20.7 bar)
0°F to 150°F (-18°C to 66°C)
Note: Air must be dry enough to avoid ice formation at temperatures below 32°F (2°C).
Weight ..... 1.79 lb. (0.81 kg)

Materials of Construction

Adjustment Mechanism / Springs ..... 316 Stainless Steel
Body ..... 316 Stainless Steel
Bonnet / Knob (R10) ..... Acetal
Bottom Plug ..... 316 Stainless Steel
Poppet ..... 316 Stainless Steel
Seals ..... Fluorocarbon

Compressed Air Filters

Air Preparation Units - 07R Regulators - Standard 3/8", 1/2", 3/4" NPT - Basic 1/2" Body

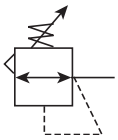

Features

- Secondary aspiration plus balanced poppet provides quick response and accurate pressure regulation.
- Rolling diaphragm for extended life.
- Two high flow 1/4" gauge ports can be used as additional outlets.
- Easily serviced.
- Removable non-rising knob for panel mounting and tamper resistance.
- High Flow: 3/8" – 70 SCFM§
  1/2" – 90 SCFM§
  3/4" – 90 SCFM§

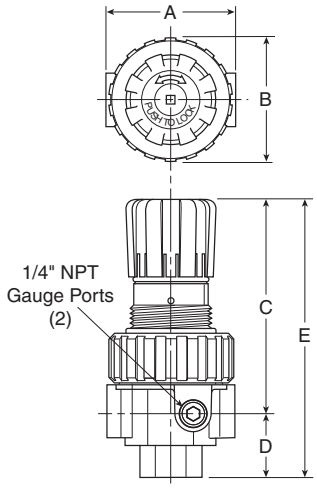

Port Size	NPT
Without Gauge	
3/8"	07R213A*
1/2"	07R313A*
3/4"	07R413A*

NOTE: 2.00 Dia. (51mm) hole required for panel mounting.

§ SCFM = Standard cubic feet per minute at 100 PSIG inlet, 90 PSIG no flow secondary setting and 10 PSIG pressure drop.

07R Regulator Dimensions		
A 3.24 (82)	B 2.74 (70)	C 4.79 (122)
D 1.61 (41)	E 6.40 (163)	

Inches (mm)

⚠ WARNING

Product rupture can cause serious injury.
Do not connect regulator to bottled gas.
Do not exceed maximum primary pressure rating.

Ordering Information

07R	3	13	A	*	—	—	---

Port Size
- 2 3/8 Inch
- 3 1/2 Inch
- 4 3/4 Inch

Pressure Range
- Without Gauge
- 13 125 PSIG

Relief
- A Relieving

Engineering Level
- * Will be Entered at Factory

Port Type
- Blank NPT

* 3/8 & 1/2 inch meet ISO 1179-1 Standard.

Options
- Blank No Options

† Inlet Pressure is 100 PSIG. For other pressures, contact factory.

Preset / Pressure Limited
- Blank None

Compressed Air Filters

Air Preparation Units 07R Air Line Regulators

Technical Information

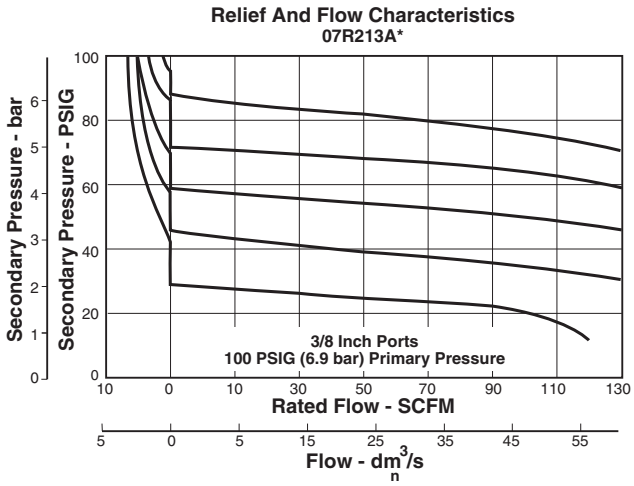

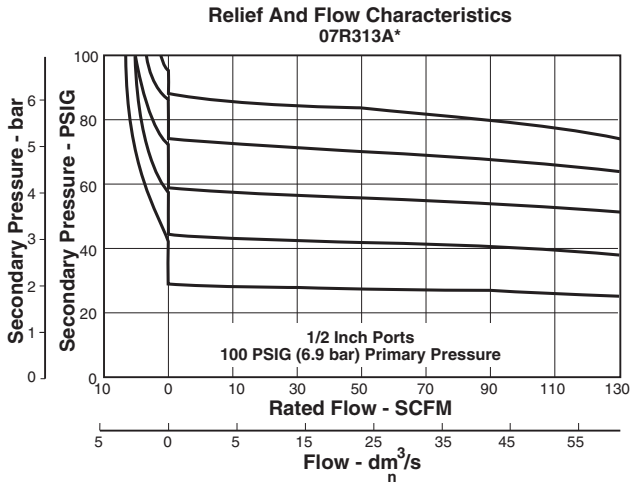

CAUTION:

REGULATOR PRESSURE ADJUSTMENT –

The working range of knob adjustment is designed to permit outlet pressures within their full range. Pressure adjustment beyond this range is also possible because the knob is not a limiting device. This is a common characteristic of most industrial regulators, and limiting devices may be obtained only by special design.

For best performance, regulated pressure should always be set by increasing the pressure up to the desired setting.

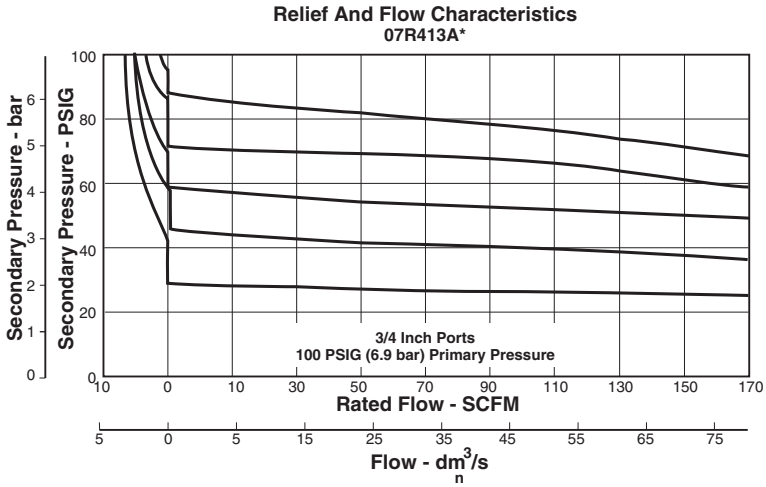

07R Regulator Kits & Accessories

Bonnet Assembly Kit PS715P
Control Knob P04069B
Gauges – 60 PSIG (0 to 4.1 bar) K4520N14060
160 PSIG (0 to 11.0 bar) K4520N14160

Mounting Bracket Kit (Includes Panel Mount Nut) PS807P
Panel Mount Nut – Plastic P04082
Metal P04079B

Service Kit – Relieving (Includes Poppet) PS808P

Springs – 2-125 PSIG Range P04063

Tamperproof Kit PS737P

Specifications

Gauge Ports (2) ..... 1/4 Inch
(Can be used as additional High Flow 1/4 Inch Outlet Ports)
Port Threads ..... 3/8, 1/2, 3/4 Inch
Primary Pressure Rating –
Maximum Primary Pressure ..... 250 PSIG (17.2 bar)
Secondary Pressure Range –
Standard Pressure ..... 2 to 125 PSIG (0 to 8.6 bar)

Temperature Rating ..... 32°F to 175°F (0°C to 80°C)
Weight 2.5 lb. (1.1 kg)

Materials of Construction

Adjusting Stem ..... Steel
Body ..... Zinc
Bonnet, Piston Stem, Valve Poppet & Cap ..... Plastic
Collar, Knob ..... Plastic
Diaphragm ..... Nitrile
Seals ..... Nitrile
Springs – Poppet ..... Stainless
Control ..... Steel

Compressed Air Filters

Air Preparation Units - P3NR Regulators - High Flow 3/4", 1", 1 1/2" NPT - Basic 1" Body

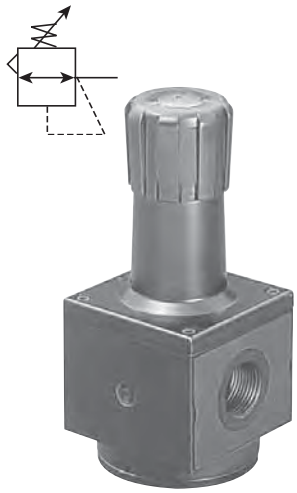

Features

- Port blocks (PB) available to provide 1-1/2" port extension to 1" ported bodies.
- Self relieving feature plus balanced poppet provides quick response and accurate pressure regulation.
- Solid control piston for extended life.
- High Flow: 3/4" – 200 SCFM§
  1" – 300 SCFM§
  1½" – 300 SCFM§

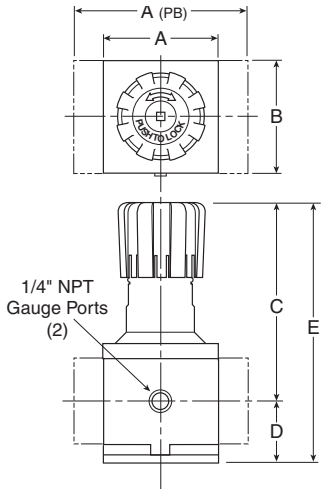

P3NR Regulator Dimensions		
A 3.62 (92)	A(PB) 5.91 (150)	B 3.62 (92)
C 6.38 (162)	D 2.08 (53)	E 8.46 (215)

Inches (mm)

Port Size	NPT
Without Gauge	
3/4"	P3NRA96BNN
1"	P3NRA98BNN
1½	P3NRA9PBNN

NOTE: 2.00 Dia. (51mm) hole required for panel mounting.

§ SCFM = Standard cubic feet per minute at 100 PSIG inlet, 90 PSIG no flow secondary setting and 10 PSIG pressure drop.

⚠ WARNING

Product rupture can cause serious injury.
Do not connect regulator to bottled gas.
Do not exceed maximum primary pressure rating.

Ordering Information

P3N	R	A	9	8	B	N	N

Design Level

Port Type
- 9 NPT Female

* 3/4 & 1 inch meet ISO 1179-1 Standard.

Port Size
- 6 3/4" (w/o Port Blocks)
- 8 1" (w/o Port Blocks)
- P 1-1/2" Port Blocks (w/ 1" Ported Body)

Relief
- B Relieving

Adjustment
- N Non-Rising Knob

Pressure Gauge
- Without Gauge
- N 125 PSI (0 to 8 bar)

Compressed Air Filters

Air Preparation Units - P3NR Air Line Regulators

Technical Information

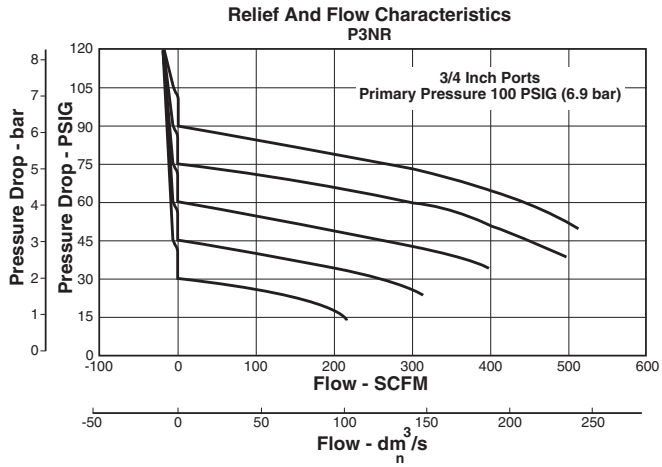

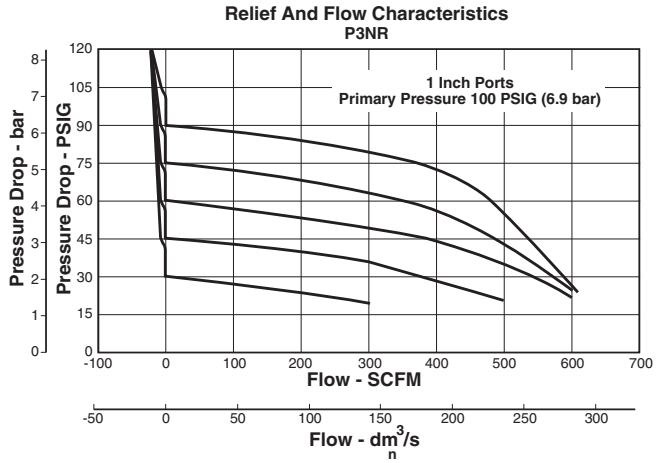

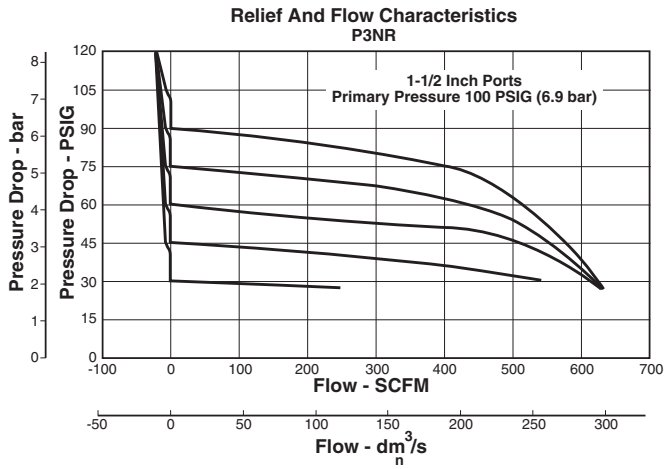

CAUTION:

REGULATOR PRESSURE ADJUSTMENT –

The working range of knob adjustment is designed to permit outlet pressures within their full range. Pressure adjustment beyond this range is also possible because the knob is not a limiting device. This is a common characteristic of most industrial regulators, and limiting devices may be obtained only by special design.

For best performance, regulated pressure should always be set by increasing the pressure up to the desired setting.

P3NR Regulator Kits & Accessories

Control Knob P3NKA00PN

Gauges – 60 PSIG (0 to 4.1 bar) K4520N14060
160 PSIG (0 to 11.0 bar) K4520N14160

Mounting Bracket Kit* P3NKA00MW

Service Kit – Relieving P3NKA00RR

Springs – 2-125 PSIG Range C10A1308

Specifications

Gauge Ports (2) ..... 1/4 Inch
(Can be used as additional High Flow 1/4 Inch Outlet Ports)

Port Threads ..... 3/4, 1, 1-1/2 Inch

Primary Pressure Rating –
Maximum Primary Pressure ..... 250 PSIG (17.2 bar)

Secondary Pressure Range –
Standard Pressure ..... 2 to 125 PSIG (0 to 8.6 bar)

Temperature Rating ..... 32°F to 175°F (0°C to 80°C)

Weight – 3/4" ..... 4.2 lb. (1.9 kg)
1" ..... 4.2 lb. (1.9 kg)
1½" † ..... 5.3 lb. (2.4 kg)

Materials of Construction

Adjusting Stem ..... Steel
Body ..... Aluminum
Bonnet ..... Aluminum
Knob ..... Plastic
Piston ..... Plastic
Poppet Assembly ..... Brass
Seals ..... Nitrile
Springs – Poppet & Control ..... Steel

† 1" Port Body with 1½" Port Block.

Compressed Air Filters

Air Preparation Units - 14E Filter/Regulator - Miniature 1/8", 1/4" NPT - Basic 1/8" Body

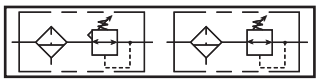

Features

- Excellent water removal efficiency.
- Unbalanced poppet standard.
- Solid control piston for extended life.
- Space saving package offers both filter and regulator features in one integral unit.
- Non-rising adjustment knob.
- Two full flow 1/8" gauge ports.
- High Flow: 1/8" – 16 SCFM§
  1/4" – 18 SCFM§

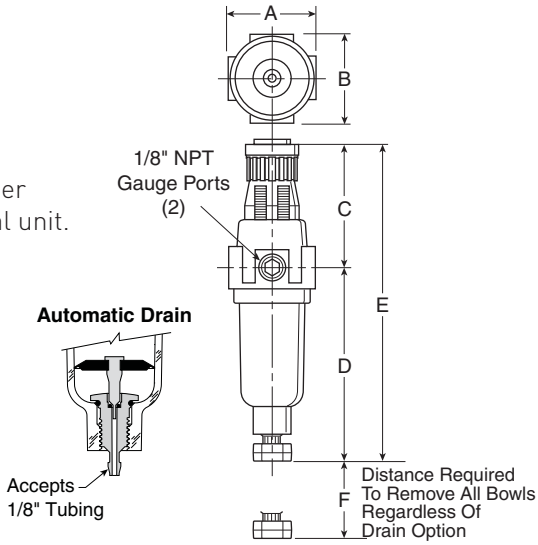

Port Size	NPT	
	Twist Drain	Automatic Pulse Drain
Poly Bowl‡		
1/8"	14E01B13F*	14E05B13F*
1/4"	14E11B13F*	14E15B13F*
Metal Bowl		
1/8"	14E03B13F*	14E07B13F*
1/4"	14E13B13F*	14E17B13F*

‡ For polycarbonate bowl see Caution on page A2.

§ SCFM = Standard cubic feet per minute at 100 PSIG inlet, 90 PSIG no flow secondary setting and 10 PSIG pressure drop.

NOTE: 1.218 Dia. (31mm) hole required for panel mounting.

14E Filter / Regulator Dimensions		
A 1.62 (41)	B 1.58 (40)	C 2.42 (61)
D 3.79 (96)	D† 3.64 (92)	E 6.21 (158)
E† 6.06 (154)	F 1.60 (41)	

Inches (mm)
† With Auto Drain

Ordering Information

14E	1	1	B	13	F	*	—	—	---

Port Size
- 0 1/8 Inch
- 1 1/4 Inch

Bowl Options
- Polycarbonate Bowl
  - 1 Twist Drain
  - 5 Automatic Drain
- Metal Bowl
  - 3 Twist Drain
  - 7 Automatic Drain

Elements
- B 5 Micron

Pressure Range
- 13 125 PSIG

Relief
- F Relieving

Engineering Level
- * Will be Entered at Factory

Port Type
- Blank NPT

Options
- Blank No Options

† Inlet Pressure is 100 PSIG. For other pressures, contact factory.

Preset / Pressure Limited
- Blank None

Compressed Air Filters

Air Preparation Units - Prep Air II, 14E Filter/Regulators Technical Information

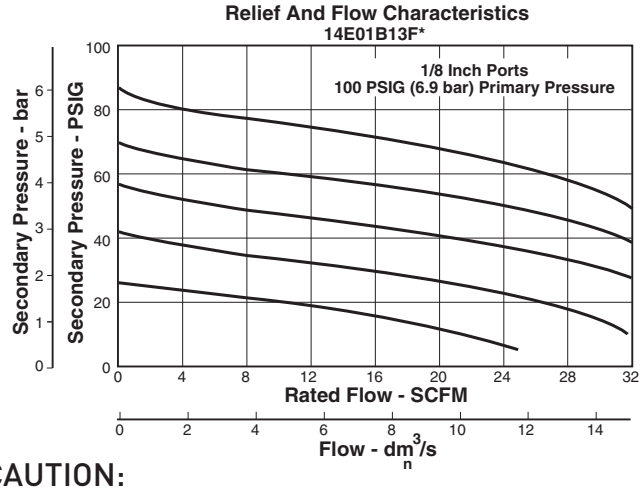

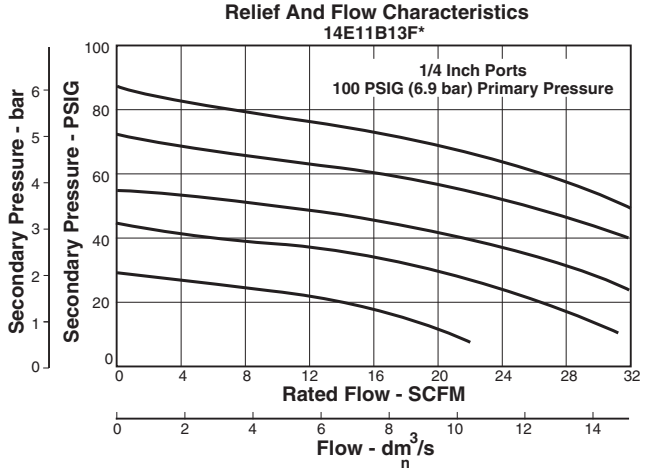

CAUTION:

REGULATOR PRESSURE ADJUSTMENT – The working range of knob adjustment is designed to permit outlet pressures within their full range. Pressure adjustment beyond this range is also possible because the knob is not a limiting device. This is a common characteristic of most industrial regulators, and limiting devices may be obtained only by special design.

For best performance, regulated pressure should always be set by increasing the pressure up to the desired setting.

⚠ WARNING

Product rupture can cause serious injury.
Do not connect regulator to bottled gas.
Do not exceed maximum primary pressure rating.

14E Filter / Regulator Kits & Accessories

Bowl Kits –

Poly Bowl – Automatic Drain PS408BP
Twist Drain PS404P

Metal Bowl – Automatic Drain PS451BP
Twist Drain PS447BP

Filter Element Kits – 5 Micron PS403P

Gauges –???? 30 PSIG (0 to 2.1 bar) K4515N18030
60 PSIG (0 to 4.1 bar) K4515N18060
160 PSIG (0 to 11.0 bar) K4515N18160

Mounting Bracket Kit (Includes Panel Mount Nut) PS417BP

Panel Mount Nut P78652

Poppet Kit – Unbalanced PS424BP

Service Kit – Relieving PS423P

Springs – 2- 125 PSIG Range (Gold) P01173

Specifications

Automatic Pulse Drain Tube Barb ..... 1/8 Inch

Bowl Capacity ..... 1 Ounce

Gauge Ports (2) (Can be used for Full Flow) ..... 1/8 Inch

Port Threads ..... 1/8, 1/4 Inch

Pressure & Temperature Ratings –

Polycarbonate Bowl
0 to 150 PSIG (0 to 10.3 bar), 32°F to 125°F (0°C to 52°C)

Metal Bowl
0 to 250 PSIG (0 to 17.2 bar), 32°F to 175°F (0°C to 80°C)

Secondary Pressure Ranges –
Standard Pressure ..... 2 to 125 PSIG (0 to 8.6 bar)

Weight ..... 0.4 lb. (0.18 kg)

Materials of Construction

Adjusting Nut ..... Brass

Adjusting Stem & Spring ..... Steel

Body ..... Zinc

Bonnet, Knob, Seat, Piston, Holder & Deflector ..... Plastic

Bowls Available – Transparent ..... Polycarbonate
Metal (Without Sight Gauge) ..... Zinc

Drains – Manual – Twist Type
Body & Stem ..... Plastic
Seals ..... Nitrile

Automatic – Pulse Type
Piston & Seals ..... Nitrile
Stem, Seat, Adaptor & Washers ..... Aluminum

Filter Elements – 5 Micron (Standard) ..... Plastic

Seals ..... Nitrile

Compressed Air Filters

Air Preparation Units - FB548 Filter/Regulator - Miniature 1/4" Ports

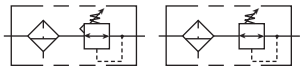

B548

Features

- Stainless Steel Construction Handles Most Corrosive Environments
- Large Diaphragm To Valve Area Ratio For Precise Regulation And High Flow Capacity
- 1/8" Female Threaded Drain*
- Meets NACE Specifications MR-01-75/ISO 15156.
- High Flow: 1/4" – 12 SCFM§

* Beginning January 2008

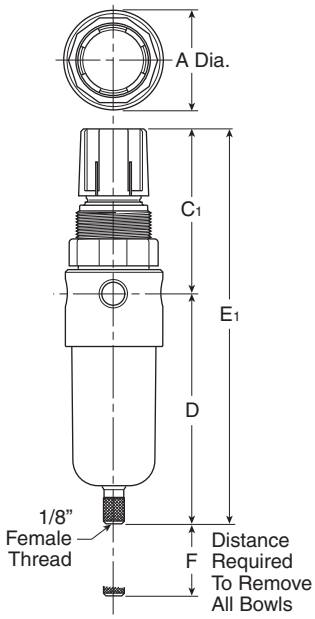

Port Size	NPT
1/4"	FB548-02DGCSS

§ SCFM = Standard cubic feet per minute at 100 PSIG inlet, 75 PSIG no flow secondary setting and 15 PSIG pressure drop.

FB548 Piggyback Dimensions		
A 1.56 (40)	C_1 2.17 (55)	D 3.63 (92)
E_1 3.06 (78)	F 1.58 (40)	

inches (mm)
NOTE: 1.25 Dia. (32mm) hole required for panel mounting.

⚠ WARNING

Product rupture can cause serious injury.
Do not connect regulator to bottled gas.
Do not exceed maximum primary pressure rating.

Ordering Information

FB548	-	02	D	G	C		SS

Series	Port Type	Port Size	Bowl	Element	Reduced Pressure Range	Options	Material
B548 Standard Knob	- NPT	02 1/4 Inch	D Metal Bowl without Sight Gauge	G 5 Micron	C 0-125 PSIG (0-8.5 bar)	Blank Relieving	SS Stainless Steel

Compressed Air Filters

Air Preparation Units - FB548 Filter/Regulators
Technical Information

Operation

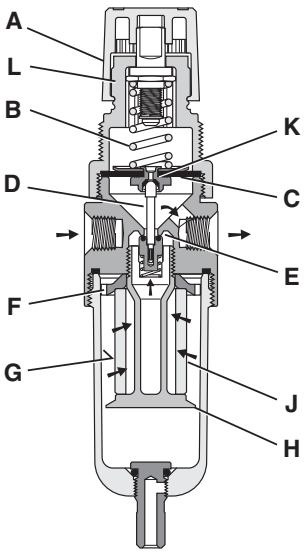

Turning the adjusting knob clockwise applies a load tocontrol spring **(B)** which forces diaphragm **(C)** and valve poppet assembly **(D)** to move downward allowing filtered air to flow through the seat area **(E)** created between the poppet assembly and the seat. **"First stage filtration".** Air pressure supplied to the inlet port is directed through deflector plate **(F)** causing a swirling centrifugal action forcing liquids and coarse particles to the inner bowl wall **(G)** and down below the lower baffle **(H)** to the quiet zone. After liquids and large particles are removed in the first stage of filtration **"second stage filtration"** occurs as air flows through element **(J)** where smaller particles are filtered out and retained. The air flow now passes through seat area **(E)** to the outlet port of the unit. Pressure in the downstream line is sensed below the diaphragm **(C)** and offsets the load of spring **(B)**. When downstream pressure reaches the set-point, poppet valve assembly **(D)** and diaphragm **(C)** move upward closing seat area **(E)**. Should downstream pressure exceed the desired regulated pressure, the excess pressure will cause the diaphragm **(C)** to move upward opening vent hole **(K)** venting the excess pressure to atmosphere through the hole in the bonnet **(L)**. (This occurs in the standard relieving type filter/regulators only.)

Technical Information

CAUTION:

REGULATOR PRESSURE ADJUSTMENT – The working range of knob adjustment is designed to permit outlet pressures within their full range. Pressure adjustment beyond this range is also possible because the knob is not a limiting device. This is a common characteristic of most industrial regulators, and limiting devices may be obtained only by special design.

For best performance, regulated pressure should always be set by increasing the pressure up to the desired setting.

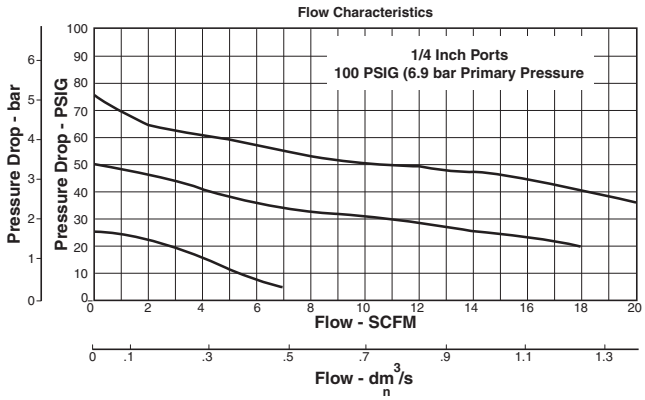

FB548, Regulator Kits & Accessories

FB548 Bonnet Kit (Knob Included) CKR364YSS
Filter Element Kits –
Particulate (5 Micron) EK504VY
Gauge –
160 PSIG (0 to 1100 kPa), 2" Face K4515N14160SS
Manual Twist Drain SA600Y7-1SS
Panel Mount Bracket (Stainless) 161X57-SS
Panel Mount Nut –
Stainless R05X51-SS
Plastic R05X51-P
Service Kit –
Relieving RK549YSS

Springs –
0-125 PSIG Range SPR-377-1-SS

Specifications

Bowl Capacity ..... 1.0 Ounces
Filter Rating ..... 5 Micron
Gauge Port ..... 1/4 Inch
Operation ..... Fluorocarbon Diaphragm
Port Threads ..... 1/4 Inch
Pressure & Temperature Ratings – ..... 300 PSIG Max (20.7 bar)
0°F to 150°F (-18°C to 66°C)
Note: Air must be dry enough to avoid ice formation at temperatures below 32°F (2°C).
Sump Capacity ..... 0.4 Ounce
Weight ..... 0.6 lb. (0.27 kg)

Materials of Construction

Adjustment Mechanism / Springs ..... 316 Stainless Steel
Body ..... 316 Stainless Steel
Bonnet (B548) ..... Acetal
Bottom Plug ..... 316 Stainless Steel
Knob (B548) ..... Polypropylene
Poppet ..... 316 Stainless Steel
Seals ..... Fluorocarbon

Compressed Air Filters

Air Preparation Units - 06E Filter/Regulator - Compact 1/4", 3/8", 1/2" NPT - Basic 3/8" Body

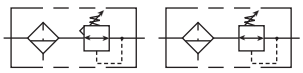

Features

- Space saving package offers both filter and regulator features for optimal performance.
- Excellent water removal efficiency.
- Rolling diaphragm for extended life.
- Quick response, and accurate pressure regulation regardless of changing flow or inlet pressure.
- Two high flow 1/4" gauge ports can be used as additional outlets.
- Shown with recommended metal bowl guard.
- High Flow: 1/4" – 46 SCFM§
  3/8" – 55 SCFM§
  1/2" – 61 SCFM§

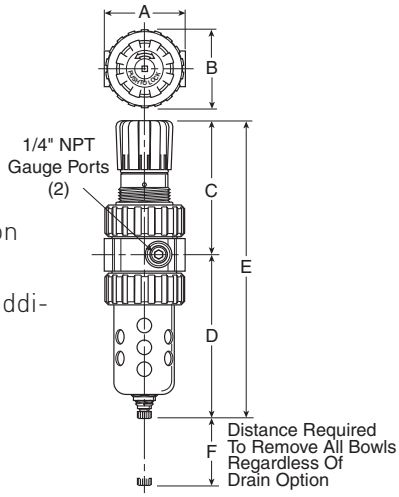

Port Size	NPT	
	Twist Drain	Automatic Float Drain
Poly Bowl‡ / Metal Guard		
1/4"	06E12B13A*	06E16B13A*
3/8"	06E22B13A*	06E26B13A*
1/2"	06E32B13A*	06E36B13A*
Metal Bowl / Sight Gauge		
1/4"	06E14B13A*	06E18B13A*
3/8"	06E24B13A*	06E28B13A*
1/2"	06E34B13A*	06E38B13A*

‡ For polycarbonate bowl see Caution on page 2.
§ SCFM = Standard cubic feet per minute at 100 PSIG inlet, 90 PSIG no flow secondary setting and 10 PSIG pressure drop.
NOTE: 2.00 Dia. (50.8 mm) hole required for panel mounting. Max. panel thickness 1/4".

06E Filter / Regulator Dimensions			
A 2.81 (71)	B 2.74 (70)	C 4.69 (119)	D 5.69 (145)
D† 5.74 (146)	E 10.38 (264)	E† 10.43 (265)	F 2.25 (57)

Inches (mm)
† With Twist Drain or Auto Pulse Drain

⚠ WARNING

Product rupture can cause serious injury.
Do not connect regulator to bottled gas.
Do not exceed maximum primary pressure rating.

Ordering Information

06E	1	2	B	13	A	*	—	—	---

Port Size
- 1 1/4 Inch
- 2 3/8 Inch
- 3 1/2 Inch

Elements
- B 5 Micron

Relief
- A Relieving

Port Type
- Blank NPT

* 1/4 & 3/8 inch meet ISO 1179-1 Standard.

Preset
- Blank None

Bowl Options

Polycarbonate Bowl	Metal Bowl
2 Metal Bowl Guard / Twist Drain	4 Sight Gauge / Twist Drain
6 Metal Bowl Guard / Auto Float Drain	8 Sight Gauge / Auto Float Drain

Pressure Range
- 13 125 PSIG

Engineering Level
- * Will be Entered at Factory

Options
- Blank No Options

† Inlet Pressure is 100 PSIG. For other pressures, contact factory.

Compressed Air Filters

Air Preparation Units - 06E Filter/Regulators
Technical Information

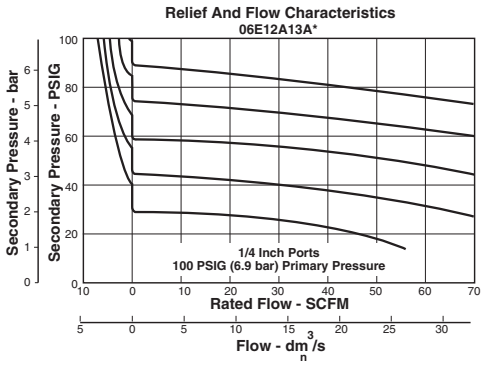

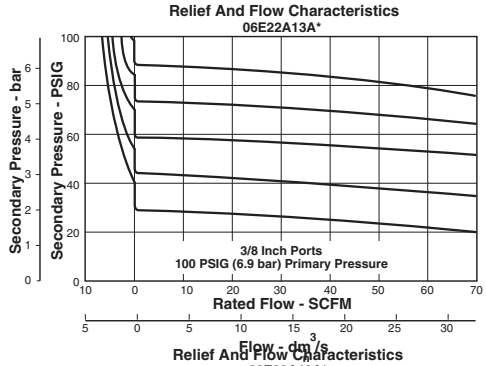

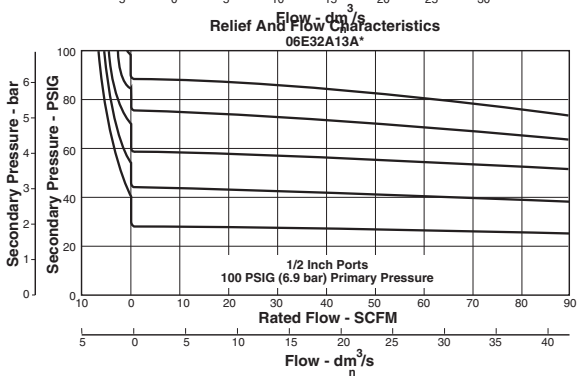

CAUTION:

REGULATOR PRESSURE ADJUSTMENT – The working range of knob adjustment is designed to permit outlet pressures within their full range. Pressure adjustment beyond this range is also possible because the knob is not a limiting device. This is a common characteristic of most industrial regulators, and limiting devices may be obtained only by special design.

For best performance, regulated pressure should always be set by increasing the pressure up to the desired setting.

06E Filter / Regulator Kits & Accessories

Bonnet Assembly Kit PS715P
Bowl Guard Kit PS705P
Bowl Kits –
Poly Bowl – Automatic Float Drain PS722P
Twist Drain PS732P
Metal Bowl – Sight Gauge / Automatic Drain PS723P
Sight Gauge / Twist Drain PS735P
Control Knob P04069B
Drain Kit – Automatic Float Drain PS506P
Twist Drain PS512P

Filter Element Kits – 5 Micron PS702P

Gauges – 60 PSIG (0 to 4.1 bar) K4520N14060
160 PSIG (0 to 11.0 bar) K4520N14160

Mounting Bracket Kit (Includes Panel Mount Nut) PS707P
Panel Mount Nut P04082

Service Kits – Non-Relieving (Includes Poppet) PS711P
Relieving (Includes Poppet) PS710P
Seat Insert Kit PS713P
Spring – 2- 125 PSIG Range P04063

Tamperproof Kit (Key Lock) PS737P

Specifications

Bowl Capacity ..... 4.4 Ounces
Gauge Ports (2) ..... 1/4 Inch
(Can be used as Additional Full Flow 1/4" Outlet Ports)
Port Threads ..... 1/4, 3/8, 1/2 Inch

Pressure & Temperature Ratings –
Polycarbonate Bowl – 0 to 150 PSIG (0 to 10.4 bar)
32°F to 125°F (0°C to 52°C)
Metal Bowl – 0 to 250 PSIG (0 to 17.2 bar)
32°F to 175°F (0°C to 80°C)
Automatic Float Drain – 15 to 250 PSIG (1.0 to 17.2 bar)
Secondary Pressure Range –
Standard Pressure ..... 2 to 125 PSIG (0 to 8.6 bar)

Sump Capacity ..... 1.75 Ounces
Weight ..... 1.6 lb. (0.7 kg)

Materials of Construction

Adjusting Stem ..... Steel
Body ..... Zinc
Bonnet, Internal Parts ..... Plastic
Bowls Available – Transparent ..... Polycarbonate
Metal (With or Without Sight Gauge) ..... Zinc
Bowl Guard ..... Steel
Collar ..... Plastic
Diaphragm ..... Nitrile
Drains – Manual Twist Drain Standard
Body & Nut ..... Plastic
Automatic Float Drain Optional
(Interchangeable for Field Conversions)
Operating Range ..... 10 to 250 PSIG (.7 to 17.2 bar)
Housing, Float ..... Plastic
Seals ..... Nitrile
Springs, Push Rod ..... Stainless Steel
Knob ..... Plastic
Filter Elements – 5 Micron (Optional) ..... Plastic

Seals ..... Nitrile
Sight Gauge ..... Polyamide
Springs – Poppet ..... Stainless
Control ..... Steel

Compressed Air Filters

Air Preparation Units - FB11 Filter/Regulator - Standard 1/2" Ports

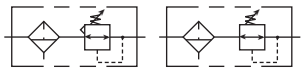

B11

Features

- Stainless steel construction handles most corrosive environments.
- Large diaphragm to valve area ratio for precise regulation and high flow capacity.
- 1/8" female threaded drain.
- Meets NACE specifications MR-01-75/ISO-15156.
- Low temperature version available.
- High Flow: 1/2" – 72 SCFM§

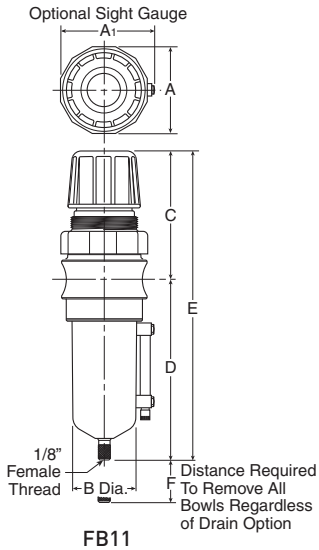

FB11

Port Size	Adjustment Type	NPT		BSPP	
		Manual Twist Drain	Automatic Float Drain	Manual Twist Drain	Automatic Float Drain
1/2"	Metal Bowl with Sight Gauge				
	Knob	**FB11-04WGCSS**	**FB11-04WGCRSS**	FB11G04WGCSS	FB11G04WGCRSS

Standard part numbers shown bold. For other models refer to ordering information below.

§ SCFM = Standard cubic feet per minute at 100 PSIG inlet, 90 PSIG no flow secondary setting and 15 PSIG pressure drop.

FB11 Piggyback Dimensions		
A 2.34 (60)	A1 2.50 (64)	B 1.75 (44)
C 3.59 (91)	D 5.00 (127)	E 8.59 (218)
F 2.12 (54)		

inches (mm)
NOTE: 1.75 Dia. (44mm) hole required for panel mounting.

⚠ WARNING

Product rupture can cause serious injury.
Do not connect regulator to bottled gas.
Do not exceed maximum primary pressure rating.

Ordering Information

FB11	-	04	W	G	C	—	SS

Series	Port Type	Port Size	Bowl	Element	Reduced Pressure Range	Options	Material
FB11 Standard Knob	- NPT	04 1/2 Inch	D Metal Bowl without Sight Gauge W Metal Bowl with Sight Gauge	G 5 Micron	C 0-125 PSIG (0-8.5 bar)	Blank Relieving	SS Stainless Steel

Compressed Air Filters

Air Preparation Units - FB11 Filter/Regulators

Technical Information

Operation

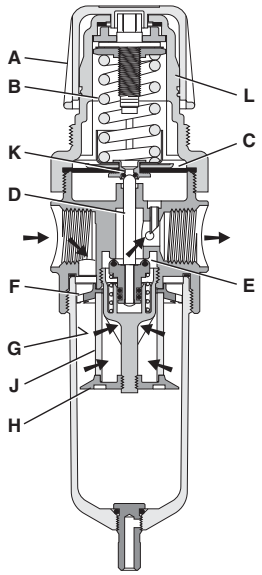

Turning the adjusting knob clockwise applies a load to control spring **(B)** which forces diaphragm **(C)** and valve poppet assembly **(D)** to move downward allowing filtered air to flow through the seat area **(E)** created between the poppet assembly and the seat. **"First stage filtration".**
Air pressure supplied to the inlet port is directed through deflector plate **(F)** causing a swirling centrifugal action forcing liquids and coarse particles to the inner bowl wall **(G)** and down below the lower baffle **(H)** to the quiet zone. After liquids and large particles are removed in the first stage of filtration **"second stage filtration"** occurs as air flows through element **(J)** where smaller particles are filtered out and retained. The air flow now passes through seat area **(E)** to the outlet port of the unit. Pressure in the downstream line is sensed below the diaphragm **(C)** and offsets the load of spring **(B)**. When downstream pressure reaches the set-point, poppet valve assembly **(D)** and diaphragm **(C)** move upward closing seat area **(E)**. Should downstream pressure exceed the desired regulated pressure, the excess pressure will cause the diaphragm **(C)** to move upward opening vent hole **(K)** venting the excess pressure to atmosphere through the hole in the bonnet **(L)**. (This occurs in the standard relieving type filter/regulators only.)

Technical Information

CAUTION:

REGULATOR PRESSURE ADJUSTMENT – The working range of knob adjustment is designed to permit outlet pressures within their full range. Pressure adjustment beyond this range is also possible because the knob is not a limiting device. This is a common characteristic of most industrial regulators, and limiting devices may be obtained only by special design.

For best performance, regulated pressure should always be set by increasing the pressure up to the desired setting.

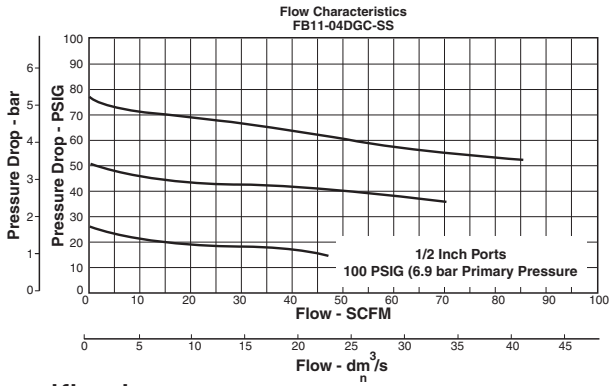

FB11 Regulator Kits & Accessories

FB11 Bonnet Kit (Knob Included) CKR10YSS
Drain Kit –
Automatic Float Drain SA602MDSS
Manual Twist Drain SA600Y7-1SS
Filter Element Kit –
Particulate (5 Micron) EKF10VY
Gauge –
160 PSIG (0 to 1100 kPa), 2" Face K4520N14160SS
Panel Mount Bracket (Stainless) R10Y57-SS
Panel Mount Nut –
Stainless R10X51-SS
Plastic R10X51-P
Service Kit –
Relieving RKR10YSS

Spring –
0-125 PSIG Range SPR-389-1-SS

Materials of Construction

Adjustment Mechanism / Springs ..... 316 Stainless Steel
Body ..... 316 Stainless Steel
Bonnet / Knob (B11) ..... Acetal
Bottom Plug ..... 316 Stainless Steel
Poppet ..... 316 Stainless Steel
Seals ..... Fluorocarbon
Sight Gauge ..... Isoplast

Specifications

Bowl Capacity ..... 4.0 Ounces
Filter Rating ..... 5 Micron
Gauge Port ..... 1/4 Inch
Operation ..... Fluorocarbon Diaphragm
Port Threads ..... 1/2 Inch
Pressure & Temperature Ratings –
Metal Bowl (D) ..... 300 PSIG Max (20.7 bar)
0°F to 150°F (-18°C to 66°C)
Metal Bowl (W) ..... 0 to 250 PSIG (0 to 17.2 bar)
0°F to 150°F (-18°C to 66°C)
Automatic Float Drain ..... 15 to 175 PSIG (1 to 12 bar)
40°F to 125°F (4°C to 52°C)
Note: Air must be dry enough to avoid ice formation at temperatures below 32°F (2°C).
Sump Capacity ..... 1.7 Ounce
Weight ..... 2.42 lb. (1.09 kg)

Compressed Air Filters

Automatic Drains - High and Normal Capacity

High Capacity Electric Solenoid Drain

The Balston Automatic Drain Assembly, P/N 20-440 automatically removes water from Balston filter housings. The autodrain consists of a solenoid valve and an automatic timer that can be adjusted to the desired cycle time and is powered by 120/240 VAC, 50/60 Hz. To drain receiving tanks, use any commercially available Y-strainer (ex. Keystone 911 Series or Watts Model 7771) to protect the 20-440.

20-440

20-211

High Capacity Non-Electrical Float Drain

In the 20-211 design, a sealed stainless steel float operates a needle valve by means of a lever. All internal parts are stainless steel. The 20-211 drain is a rugged design for high volumes of liquid.

Normal Capacity Non-Electrical Float Drain

In the 20-402 design, a float rises to operate a pilot-controlled valve when the liquid level in the body of the drain reaches a predetermined level. The float is reseated by the force of line pressure as soon as the liquid is drained.

20-402

Principal Specifications and Ordering Information

Model	20-211	20-440	20-402
Port Size	1/2" NPT	1/4" NPT	1/4" NPT
Maximum Pressure	400 psig	300 psig	200 psig
Minimum Pressure	10 psig	20 psig	40 psig
Maximum Temperature	500°F (260°C)	122°F (50°C)	130°F (54°C)
Shipping Weight	2 lbs. (0.9 kg)	2 lbs. (0.9 kg)	2 lbs. (0.9 kg)
Dimensions	2.5"W X 7.3"L (6cm X 19cm)	3"W X 4"L (7cm X 10cm)	3"W X 4L (7cm X 10cm)

Compressed Air Filters

Condensate Drains - Zero Air / Zero Energy Loss

What is a zero air loss condensate drain?

Zero air loss condensate drains are designed for economical removal of unwanted water, oil emulsions, and other liquids. These drains will only open when liquid is present and will not allow any compressed air to escape from the system.

Why are they needed?

- Condensate is always present in a compressed air system.
- If condensate is not removed from a compressed air system, it will adversely affect product quality and production efficiency and will eventually lead to costly downtime.

Where are condensate drains used?

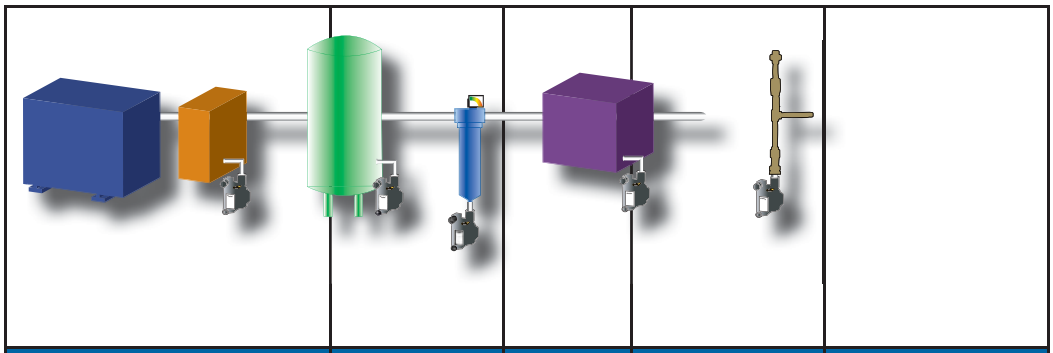

Compressor with Aftercooler	Receiver Tank	Filter	Air Dryer	Drip Leg
Removes the condensate that is collected after the air cools in the aftercooler	Removes the condensate that is collected when the air cools inside of the receiver tank	Removes the condensate that is collected in the filter bowl	Removes the condensate that is collected in the air dryer	Point-of-use applications: removes the condensate from compressed air pipes in a plant

How does the Zero Air Loss Condensate drain compare to other drains?

Condensate Removal Method	Disadvantages of Other Drains	Advantages of ZLD
Manual Drain (operators must manually open valves to discharge condensate)	• Requires constant attention • Always leads to excess air loss because air escapes whenthe valve is left open to drain the condensate	• Automatically drains condensate • When a minimum level of condensate is reached, the valve closes in time before compressed air can escape
Float Drain (uses a float connected to a drain valve that opens when enough condensate is present and closes when condensate has been removed)	• Float is susceptible to blockage from particulate contamination in condensate • Often sticks in open (leaks excess air) or closed position (no condensate is drained)	• Includes an integrated dirt screen between the level measurement and drain valve to protect the diaphragm valve • Particulate contamination is removed by the integrated dirt screen before fouling the moving parts
Solenoid Operated Drain Valves (uses a timer which allows user to open and close valve at specified intervals)	• The period for which the valve is open might not be long enough for adequate drainage of accumulated condensate • The valve will operate even if little or no condensate is present, resulting in air loss • Often requires a strainer to remove particulate contamination which can block the inlet and outlet ports	• Drain will remove condensate when liquid reaches the high level sensor • The drain will not operate until the liquid level reaches the high level sensor • Particulate contamination is removed by the integrated dirt screen before fouling the outlet port

Compressed Air Filters

Condensate Drain - Zero Air / Zero Energy Loss

How does this drain work?

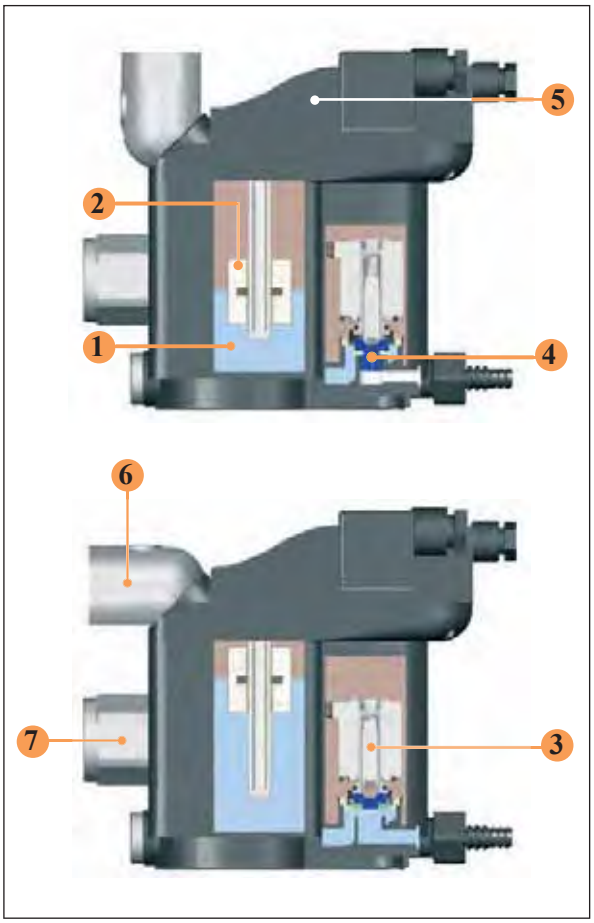

1 This collection vessel stores condensate until it is drained away.

2 This electronic level controller continuously monitors the liquid level inside the drain.

3 This depicts the electric drain valve. As soon as the electronic level controller detects a buildup of liquid, the valve opens and condensate is drained. When a minimum liquid level is reached, the valve closes before compressed air can escape.

4 The diaphragm valve ensures that contaminants are flushed out and that the condensate is prevented from forming an emulsion that would need expensive condensate treatment.

5 If an error has occurred (i.e. if the condensate cannot be discharged), the electronic control board (5) of the condensate drain generates an alarm signal. This allows timely detection of a problem and helps avoid excessive costs associated with condensate carryover to downstream components.

6 Unique swivel inlet connection for easy adaptability on 20-613 and 20-623. This allows the condensate line to be connected from the top or the rear. The 20-606 has a fixed inlet port with dynamic seal which allows the filter bowl to be removed while the drain is attached (not shown).

7 An additional liquid inlet on the 20-623 allows for the connection of a balance or vent line. This provides new connections so that condensate can no longer back up into the feed lines.

The cost of compressed air when using a timed drain valve

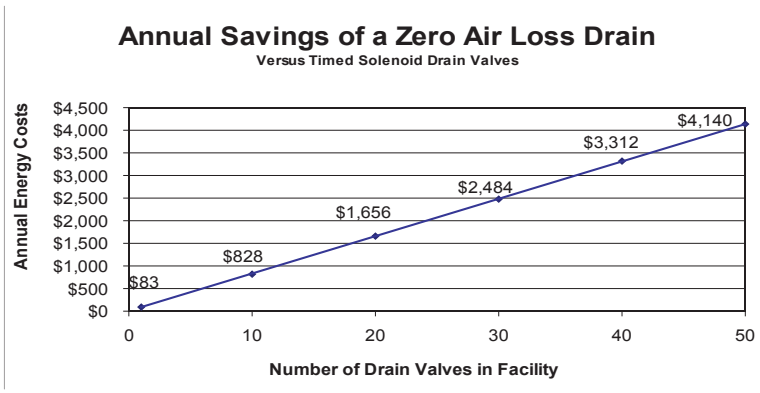

Easy installation & servicing!

The annual cost of compressed air was calculated using data from the U.S. Department of Energy and several compressed air consultants. The average annual energy cost to maintain a compressed air system is $0.23 per 1000 ft^3. If a timed solenoid drain valve opens 3-4 times per hour, the cost of the wasted air will be $80 per valve, per year.

Zero Loss Drains don't waste any compressed air and have a payback of approximately 6 months - 1 year.

Compressed Air Filters

Condensate Drain - Zero Air / Zero Energy Loss

Dimensions and Specifications

20-606

Dimensions (Inches)

20-613

Dimensions (Inches)

20-623

Dimensions (Inches)

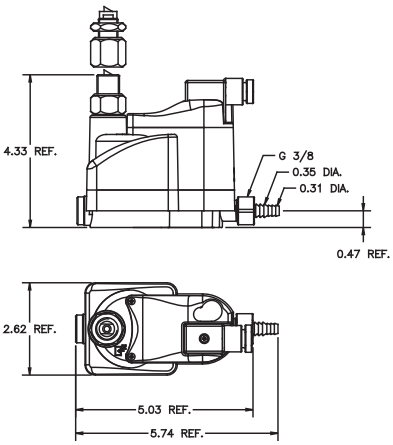

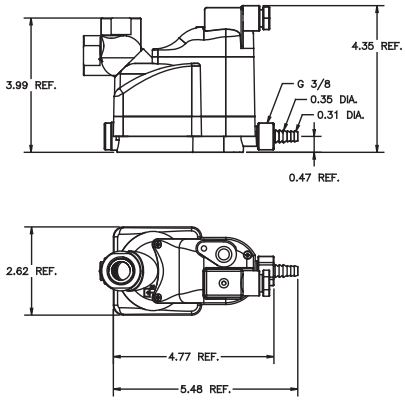

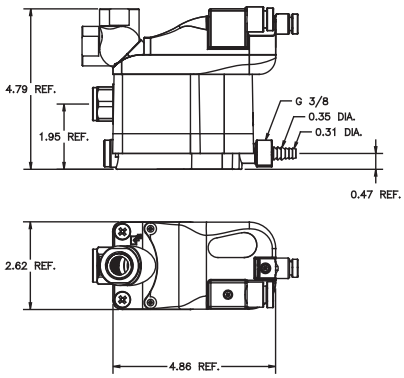

Model Number	Maximum Compressor Capacity	Maximum Refrigerated Dryer Capacity*1	Maximum Filter Capacity*2	Pressure Range	Temperature Range	Connection Size	Drain Capacity	Electrical Requirement
20-606	Not Recommended	Not Recommended	424 SCFM (720 m^3/h)	3 - 232 PSIG (0.2 - 16 bar)	35 -140°F (2 – 60 °C)	3/8" NPT	6 Gallons per day	120VAC (60Hz)
20-613	141 SCFM (240 m^3/h)	283 SCFM (480 m^3/h)	1413 SCFM (2,400 m^3/h)	3 - 232 PSIG (0.2 - 16 bar)	35 -140°F (2 – 60 °C)	1/2" NPT	13 Gallons per day	120VAC (60Hz)
20-623	247 SCFM (420 m^3/h)	494 SCFM (840 m^3/h)	2472 SCFM (4,200 m^3/h)	3 - 232 PSIG (0.2 - 16 bar)	35 -140°F (2 – 60 °C)	1/2" NPT	23 Gallons per day	120VAC (60Hz)

*1 Based on 100 psi working pressure, air compressor inlet at 77°F at 60% RH, air discharge temperature of 95°F following the aftercooler, pressure dewpoint of 37°F after the refrigerated dryer.

*2 Condensate from aftercooler or refrigerated dryer to be drained upstream – only for residual oil content or small quantities of condensate.

Note: Drains are available with BSP threads; 24V/50 - 60Hz versions are available; 24V DC on request. A 6 ft. line cord will be included with each drain.

Compressed Air Filters

Differential Pressure Indicator Kit

Balston Differential Pressure Indicator

The Balston Differential Pressure Indicator (DPI) is used to monitor the pressure drop across the filters or other components in a compressed air system. The DPI is sensitive in the range of 0 to 5 psi differential.

Principal Specifications & Ordering Information

Model	41-070	C02-2377
Differential Pressure Indicator	41-070	C02-2377
Indicator and Installation Kit (1)	41-071	N/A
Port Size	1/8" NPT	3/8"-24
Maximum Pressure	250 psig	250 psig
Maximum Temperature	130°F (54°C)	130°F (54°C)
Dimensions	1.7"W X 1.8"H (4cm X 5cm)	2.9"W X 2.25"H (7cm X 6cm)

Note

1 Installation kit includes fittings and tubing necessary for line-mounting the 41-070 DPI

41-070

41-070 Mounted on Filter Assembly

C02-2377

C02-2377 Mounted on Filter Assembly

Compressed Air Filters

Miniature Disposable Filter Units Constructed of Nylon and PVDF

Models 9922-05, 9933-05, 4433-05 and 9900-05

The 99XX-05 Models are the smallest Disposable Filter Units with 11.7 ml internal volume. These models are used in low flow gas or liquid sampling applications, such as liquids to specific-ion analyzers or gases to personal samplers. The Model 4433-05 has 1/4" and 3/8" barb connections molded into the inlet/outlet ports. The 9900-05 is available with a color indicator that turns red when saturated with oil.

Models 9922-11 and 9933-11

Models 9922-11 and 9933-11 are used for applications similar to the smaller DFUs (Models 9922-05 and 9933-05) which require greater solids holding capacity and can tolerate the increased retention time.

Model 8833-11

These Disposable Filter Units are used as continuous coalescing filters with a third port serving as the drain, slip-stream, or by-pass port.

Model 99XX-05 | Model 9922-05 | Model 8833-11

Retention Efficiency

Model	Efficiency for 0.01 Micron Particles and Droplets
DX	93%
BX, BK	99.99%

Flow Rates

Air Flow at 2 psi drop, standard cu. ft. per min. (SCFM) at indicated line pressure

Filter Housing Type	Volume of Housing (CU. FT.)	Filter Tube Grade	Flow Rate (CFM) At 10" Water Press. Drop., 0 PSIG	2 psig	20 psig	40 psig	60 psig	80 psig	100 psig	125 psig
9900-05 9922-05 9933-05 4433-05	0.0004	DQ	0.2	1.2	2.5	3.9	5.4	6.8	8.3	10.1
		BQ/BK	0.1	0.8	1.6	2.6	3.5	4.5	5.4	6.6
8822-11 8833-11 9922-11	0.0007	DX	0.4	1.8	3.6	6	8	10	12	14.6
		BX	0.2	0.9	1.8	3	4	5	6	7.3

Installation Information

Compression fittings for 1/4" O.D. tubing may be obtained from the following manufacturers: Hoke, Inc. (Gyrolock); Crawford Fitting Co. (Swagelok); Parker-Hannifin Corp. (CPI); Legris, Inc. (push-on fittings); Jaco Mfg. Co. (plastic fittings).

The following brass fittings seal by O-ring compression and may be completely recovered and reused when changing filters. They may be purchased from Parker Hannifin Corp.

Connector	1/4" tubing to 1/4" NPT, female - P/N 11970
Connector	1/4" tubing to 1/4" tubing - P/N 11971
Elbow	1/4" tubing to 1/8" NPT female (for manual drain on Type 8833-11) - P/N 11972

For connections to low pressure plastic tubing

Tubing with 1/4" ID may be slipped over the DFU end fittings and held with tubing clamps. Parker Hannifin Corp. supplies plastic barbs to connect the DFU to smaller diameter plastic tubing. The connection is suitable for pressures to 50 psig.

DFU to 1/16" ID tubing	P/N 14000 (bag of 20 barbs)
DFU to 1/8" ID tubing	P/N 14001 (bag of 20 barbs)

Parker Hannifin Corp. also offers a manual drain valve for removal of coalesced liquids from the Type 8833-11-DX

Drain Valve	1/8" NPT (male) x 1/8" ID tubing (requires fitting part 11977) P/N 20120

Compressed Air Filters

Miniature Disposable Filter Units Constructed of Nylon and PVDF

Principal Specifications

Model	9922-05	9900-05, 9933-05	4433-05	9922-11	9933-11	8833-11
Inlet and Outlet Ports	1/4" Tubing	1/4" Tubing	1st Tier/Barb 1/4" Tube 2nd Tier/Barb 3/8" Tube	1/4" Tubing	1/4" Tubing	1/4" Tubing
Drain	None	None	None	None	None	1/4" Tubing
Material of Construction	PVDF	Nylon	Nylon	PVDF	Nylon	Nylon
Filter Cartridge Length	1.25" (3.2 cm)	1.25" (3.2 cm)	1.25" (3.2 cm)	2.25" (5.7 cm)	2.25" (5.7 cm)	2 1/4"
Maximum Temperature	275°F (135°C) (1)	230°F (110°C) (1)	230°F (110°C) (1)	275°F (135°C) (1)	230°F (110°C) (1)	230°F (110°C) (1)
Maximum Pressure	125 psig (2)	125 psig (2)	125 psig (2)	125 psig (2)	125 psig (2)	125 psig (2)
Dimensions	1.0"D X 3.25"L (2.5 cm X 6 cm)	1.0"D X 3.25"L (2.5 cm X 6 cm)	1.0"D X 3.43"L (2.5 cm X 8.72 cm)	1.4"D X 4.6"L (9.1 cm X 12 cm)	1.4"D X 4.6"L (9.1cm X 12 cm)	1.4"D X 4.6"L (9.1 cm X 12 cm)

Ordering Information

For assistance, call toll-free at 1-800-343-4048 8AM to 5PM Eastern Time

Model	**9922-05**	**9900-05**	**4433-05**	**9933-05**	**9922-11**	**9933-11**	**8833-11**
Filter Cartridges Box of 10 Available in types Q and X	9922-05-❑ (3)	9900-05-❑ (3)	4433-05-❑ (3)	9933-05-❑ (3)	9922-11-❑ (3)	9933-11-❑ (3)	8833-11-❑ (3)

Notes:

1 At 0 psig

2 At 110°F (43°C)

3 To designate the grade of filter tube in the DFU, insert Grade letters after DFU designation. For example, to obtain a grade BQ filter tube in a DFU 9922-05, order: 9922-05-BQ. Please note the following limitations:

DFU	Supplied With These Grades
4433-05, 9900-05, 9922-05, 9933-05	DQ, BQ, AQ (BK) (4)
9922-11, 9933-11	DX, BX, AQ
8822-11, 8833-11	DX, BX

4 BK Grade has a color indicating feature, which turns the cartridge red when saturated with oil. Available only in types 4433-05 and 9900-05.

Offer of Sale

The items described in this document are hereby offered for sale at prices to be established by Parker Hannifin Corporation, its subsidiaries and its authorized distributors. This offer and its acceptance by any customer ("Buyer") shall be governed by all of the following Terms and Conditions. Buyer's order for any item described in its document, when communicated to Parker Hannifin Corporation, its subsidiary or an authorized distributor ("Seller") verbally or in writing, shall constitute acceptance of this offer.

1. Terms and Conditions of Sale: All descriptions, quotations, proposals, offers, acknowledgments, acceptances and sales of Seller's products are subject to and shall be governed exclusively by the terms and conditions stated herein. Buyer's acceptance of any offer to sell is limited to these terms and conditions. Any terms or conditions in addition to, or inconsistent with those stated herein, proposed by Buyer in any acceptance or an offer by Seller, are hereby objected to. No such additional, different or inconsistent terms and conditions shall become part of the contract between Buyer and Seller unless expressly accepted in writing by Seller. Seller's acceptance of any offer to purchase by Buyer is expressly conditional upon Buyer's assent to all the terms and conditions stated herein, including any terms in addition to, or inconsistent with those contained in Buyer's offer. Acceptance of Seller's products shall in all events constitute such assent.

2. Payment: Payment shall be made by Buyer within 30 days from the date of shipment. Amounts not timely paid shall bear interest at the Maximum rate permitted by law for each month or portion thereof that the Buyer is late making payment. Any claims by Buyer for omissions or shortages in a shipment shall be waived unless Seller receives notice thereof within 30 days after Buyer's receipt of the shipment.

3. Delivery: Unless otherwise provided on the face hereof, delivery shall be made F.O.B. Seller's plant. Regardless of the method of delivery, however, risk of loss shall pass to Buyer upon Seller's delivery to a carrier. Any delivery dates shown are approximate only and Seller shall have no liability for any delays in delivery.

4. Warranty: Seller warrants that the items sold hereunder shall be free from defects in material or workmanship for a period of 12 months from date of shipment to Buyer. THIS WARRANTY COMPRISES THE SOLE AND ENTIRE WARRANTY PERTAINING TO ITEMS PROVIDED HEREUNDER. SELLER MAKES NO OTHER WARRANTY, GUARANTEE, OR REPRESENTATION OF ANY KIND WHATSOEVER. ALL OTHER WARRANTIES, INCLUDING BUT NOT LIMITED TO, MERCHANTABILITY AND FITNESS FOR PURPOSE, WHETHER EXPRESS, IMPLIED, OR ARISING BY OPERATION OF LAW, TRADE USAGE, OR COURSE OF DEALING ARE HEREBY DISCLAIMED.

NOTWITHSTANDING THE FOREGOING, THERE ARE NO WARRANTIES WHATSOEVER ON ITEMS BUILT OR ACQUIRED WHOLLY OR PARTIALLY, TO BUYER'S DESIGNS OR SPECIFICATIONS.

5. Limitation of Remedy: SELLER'S LIABILITY ARISING FROM OR IN ANY WAY CONNECTED WITH THE ITEMS SOLD OR THIS CONTRACT SHALL BE LIMITED EXCLUSIVELY TO REPAIR OR REPLACEMENT OF ITEMS SOLD OR REFUND OF THE PURCHASE PRICE PAID BY BUYER, AT SELLER'S SOLE OPTION. IN NO EVENT SHALL SELLER BE LIABLE FOR ANY INCIDENTAL, CONSEQUENTIAL OR SPECIAL DAMAGES OF ANY KIND OR NATURE WHATSOEVER, INCLUDING BUT NOT LIMITED TO LOST PROFITS ARISING FROM OR IN ANY WAY CONNECTED WITH THIS AGREEMENT OR ITEMS SOLD HEREUNDER, WHETHER ALLEGED TO ARISE FROM BREACH OF CONTRACT, EXPRESS OR IMPLIED WARRANTY, OR IN TORT, INCLUDING WITHOUT LIMITATION, NEGLIGENCE, FAILURE TO WARN OR STRICT LIABILITY.

6. Changes, Reschedules and Cancellations: Buyer may request to modify the designs or specifications for the items sold hereunder as well as the quantities and delivery dates thereof, or may request to cancel all or part of this order, however, no such requested modification or cancellation shall become part of the contract between Buyer and Seller unless accepted by Seller in a written amendment to this agreement. Acceptance of any such requested modification or cancellation shall be at Seller's discretion, and shall be upon such terms and conditions as Seller may require.

7. Special Tooling: A tooling charge may be imposed for any special tooling, including without limitation, dies, fixtures, molds and patterns, acquired to manufacture items sold pursuant to this contract. Such special tooling shall be and remain Seller's property notwithstanding payment of any charges by Buyer. In no event will Buyer acquire any interest in apparatus belonging to Seller which is utilized in the manufacture of the items sold hereunder, even if such apparatus has been specially converted or adapted for such manufacture and notwithstanding any charges paid by Buyer. Unless otherwise agreed, Seller shall have the right to alter, discard or otherwise dispose of any special tooling or other property in its sole discretion at any time.

8. Buyer's Property: Any designs, tools, patterns, materials, drawings, confidential information or equipment furnished by Buyer or any other items which become Buyer's property, may be considered obsolete and may be destroyed by Seller after two (2) consecutive years have elapsed without Buyer placing an order for the items which are manufactured using such property. Seller shall not be responsible for any loss or damage to such property while it is in Seller's possession or control.

9. Taxes: Unless otherwise indicated on the face hereof, all prices and charges are exclusive of excise, sales, use, property, occupational or like taxes which may be imposed by any taxing authority upon the manufacture, sale or delivery of the items sold hereunder. If any such taxes must be paid by Seller or if Seller is liable for the collection of such tax, the amount thereof shall be in addition to the amounts for the items sold. Buyer agrees to pay all such taxes or to reimburse Seller therefore upon receipt of its invoice. If Buyer claims exemption from any sales, use or other tax imposed by any taxing authority, Buyer shall save Seller harmless from and against any such tax, together with any interest or penalties thereon which may be assessed if the items are held to be taxable.

10. Indemnity For Infringement of Intellectual Property Rights: Seller shall have no liability for infringement of any patents, trademarks, copyrights, trade dress, trade secrets or similar rights except as provided in this Part 10. Seller will defend and indemnify Buyer against allegations of infringement of U.S. patents, U.S. trademarks, copyrights, trade dress and trade secrets (hereinafter 'Intellectual Property Rights'). Seller will defend at its expense and will pay the cost of any settlement or damages awarded in an action brought against Buyer based on an allegation that an item sold pursuant to this contract infringes the Intellectual Property Rights of a third party. Seller's obligation to defend and indemnify Buyer is contingent on Buyer notifying Seller within ten (10) days after Buyer becomes aware of such allegations of infringement, and Seller having sole control over the defense of any allegations or actions including all negotiations for settlement or compromise. If an item sold hereunder is subject to a claim that it infringes the Intellectual Property Rights of a third party, Seller may, at its sole expense and option, procure for Buyer the right to continue using said item, replace or modify said item so as to make it noninfringing, or offer to accept return of said item and return the purchase price less a reasonable allowance for depreciation. Notwithstanding the foregoing, Seller shall have no liability for claims of infringement based on information provided by Buyer, or directed to items delivered hereunder for which the designs are specified in whole or part by Buyer, or infringements resulting from the modification, combination or use in a system of any item sold hereunder. The foregoing provisions of this Part 10 shall constitute Seller's sole and exclusive liability and Buyer's sole and exclusive remedy for infringement of Intellectual Property Rights.

If a claim is based on information provided by Buyer or if the design for an item delivered hereunder is specified in whole or in part by Buyer, Buyer shall defend and indemnify Seller for all costs, expenses or judgments resulting from any claim that such item infringes any patent, trademark, copyright, trade dress, trade secret or any similar right.

11. Force Majeure: Seller does not assume the risk of and shall not be liable for delay or failure to perform any of Seller's obligations by reason of circumstances beyond the reasonable control of Seller (hereinafter 'Events of Force Majeure'). Events of Force Majeure shall include without limitation, accidents, acts of God, strikes or labor disputes, acts, laws, rules or regulations of any government or government agency, fires, floods, delays or failures in delivery of carriers or suppliers, shortages of materials and any other cause beyond Seller's Control.

12. Entire Agreement/Governing Law: The terms and conditions set forth herein, together with any amendments, modifications and any different terms or conditions expressly accepted by Seller in writing, shall constitute the entire Agreement concerning the items sold, and there are no oral or other representations or agreements which pertain thereto. This Agreement shall be governed in all respects by the law of the State of Ohio. No actions arising out of the sale of the items sold hereunder or this Agreement may be brought by either party more than two (2) years after the cause of action accrues.