Mobile Robots

LD Series

Autonomous Intelligent Vehicles (AIVs), self-mapping, self-navigation.

- Natural-feature navigation
  Automatically plans routes to prevent collisions
- Fleet management
  Supervises and coordinates the entire fleet of up to 100 vehicles
- Easy deployment
  Short installation time: no facilities modifications

Ordering Information

Mobile Robots-LD Platform

Appearance	Product Type	Product Name	Maximum Load	Maximum Speed	Configuration & Attachment		Model
	OEM	LD-60	60 kg	1.8 m/s	Standard	-	37031-00000
					Docking Station kit	Docking Station : 12477-000 Battery Power Cable (0.45 m) : 12676-000	37031-00002
					Starter kit	Docking Station : 12477-000 Battery Power Cable (0.45 m) : 12676-000L MobilePlanner Software Licence : 13495-200 Joystick : 13558-000 Top Plate : 12944-000	37031-10004
		LD-90	90 kg	1.35 m/s	Standard	-	37041-00000
					Docking Station kit	Docking Station : 12477-000 Battery Power Cable (0.45 m) : 12676-000	37041-00002
					Starter kit	Docking Station : 12477-000 Battery Power Cable (0.45 m) : 12676-000L MobilePlanner Software Licence : 13495-200 Joystick : 13558-000 Top Plate : 12944-000	37041-10004
	Cart Transporter	LD-105CT	105 kg	1.35 m/s	Standard	Touchscreen :13605-000 Side Laser :13456-000	37141-00010
					Docking Station kit	Touchscreen :13605-000 Side Laser :13456-000 Docking Station :12477-050 Battery Power Cable (0.45 m) :12676-000	37141-00012
					Starter kit	Touchscreen :13605-000 Side Laser :13456-000 Docking Station :12477-050 Battery Power Cable (0.45 m) :12676-000L MobilePlanner Software Licence :13495-200 Acuity Localization :13700-000 Joystick :13558-000 Cart :75020-000	37141-01014
		LD-130CT	130 kg	0.9 m/s	Standard	Touchscreen :13605-000 Side Laser :13456-000	37161-00010
					Docking Station kit	Touchscreen :13605-000 Side Laser :13456-000 Docking Station :12477-050 Battery Power Cable (0.45 m) :12676-000	37161-00012
					Starter kit	Touchscreen :13605-000 Side Laser :13456-000 Docking Station :12477-050 Battery Power Cable (0.45 m) :12676-000L MobilePlanner Software Licence :13495-200 Acuity Localization :13700-000 Joystick :13558-000 Cart :75020-000	37161-01014

Software/Controller

Appearance	Product Name	Configuration & Attachment	Model
	MobilePlanner	Installer (USB) ＊ License dongle	13495-200
	Enterprise Manager 1100	License dongle	11167-100

＊.The latest version of MobilePlanner can be downloaded from Omron Adept Technologies Inc. website.
http://www.adept.com/Robots-Mobile

Options

Appearance	Product Name	Specification	Configuration & Attachment	Model
	High Accuracy Positioning System	Single sensor	Sensor × 1 , Mounting bracket × 1, Power connector × 1 , RS-232 connector × 1 , 25 mm wide magnetic tape South top side. 50 m roll	13660-100
		Double sensor	Sensor × 2 , Mounting bracket × 2, Power connector × 1 , RS-232 connector × 2 , 25 mm wide magnetic tape South top side. 50 m roll	13660-000
		Magnetic tape	25 mm wide magnetic tape South top side. 50 m roll	14925-000
	Acuity Localization	-	Camera, Mounting Kit, Cables, Leveling kit	13700-000
	Touchscreen	-	Touchscreen with bracket, Power supply with bracket, Power Cable, from core to power supply (33 cm in length), Power Cable, from power supply to touchscreen (183 cm in length), Ethernet Cable, between touchscreen and core (153 cm in length), Gasket, between touchscreen and AIV mounting surface, Software package, including touchscreen support	13605-000
-	Side Laser	Bundle	Laser × 2, Cable × 1 (Y Cable for 2 Laser)	13456-000
		Kit	Laser × 2, Cable × 1 (Y Cable for 2 Laser), Mounting kit × 2, Metal Cover × 2	13456-100
	Call/Door Box	WiFi Wired	Call/Door Box, Cable	13029-802

Accessories

Appearance	Product Name	Specification	Configuration & Attachment	Model
	Battery	-	-	18578-000
	Docking Station	-	Docking Station, AC Power Cable	12477-000
		Extended Wall mount	Docking Station, AC Power Cable, Extended Wall mount (for Cart Transporter)	12477-050

Appearance	Product Name	Specification	Configuration & Attachment	Model
	Joystick	Cable length: 0.6 to 3 m	-	13558-000
-	Breakout Cable	-	DB44HD Breakout Cable (D-SUB44 pin Cable for Digital I/O interface)	14165-000
-	Top Plate	Top cover for OEM type	-	12944-000
	Cart	-	-	75020-000
-	Battery Power Cable	Cable length: 0.45 m	-	12676-000L

Specifications

Mobile Robots-LD Platform General Specifications

Item		OEM		Cart Transporter		Note
		37031-□□□□□	37041-□□□□□	37141-□□□□□	37161-□□□□□	
Materials		KYDEX				
Dimension (L × W × H)		699 × 500 × 383 mm		894 × 1074 × 1394 mm ✻		✻. Height includes WiFi antenna.
Weight (with Battery)		62 kg		81 kg (Vehicle)/23 kg (Cart)		
Environment	Ambient temperature	5 to 40 °C				
	Ambient humidity	5 to 95 % (non-condensing)				
	Operating Environment	Indoor usage only, No excessive dust, no corrosive gas				Direct sunlight may cause safety laser false positive
	IP rating	IP20				
	Cleanroom rating	Fed Class 100, ISO Class5		None		

AIV (Autonomous Intelligent Vehicle) Specifications

Item		OEM		Cart Transporter		Note
		37031-□□□□□	37041-□□□□□	37141-□□□□□	37161-□□□□□	
Floor Conditions	Floor Requirements	Level surface or concrete (no water, no oil, no dirt)				
	Minimum floor flatness	FF25 (✻ ACI 117 standard)				✻. ACI 117 is the American Concrete Institute's standard for concrete floors. FF is flatness, FL is the level. Higher FF numbers represent flatter floors. FF25 is a fairly lenient specification.
	Traversable step	15 mm max. ✻1	10 mm max. ✻1	5 mm max. ✻2	5 mm max. ✻2	✻1. A speed of 250-300 mm/s and 250 mm/s, for the LD-60 and LD-90, is required for these steps. Faster or frequent driving over such steps or gaps will shorten the lifespan of the drivetrain components. Lower speeds may not traverse the step. Steps should have smooth, rounded profiles. ✻2. The Cart transporter with a cart is capable of driving over a gap or step of 5mm at a speed of 250 mm/s, but this should not be regarded as normal use. Regular driving over such gaps or steps will shorten the lifespan of the drivetrain components.
	Traversable gap	15 mm max.	15 mm max.	5 mm max. ✻2	5 mm max. ✻2	
	Climb grade	Below 1: 12 (60 kg max.) Flat floor only (over 60 kg)		Flat floor only		
Navigation	Routing	Autonomous routing by localizing with Safety Scanning Laser based on environment mapping.				
	Environmental map making method	Scan by walking the Mobile Robot through the environment, and upload the Scan data in the MobilePlanner.				
Payload	Maximum Weight	60 kg	90 kg	105 kg ✻	130 kg ✻	✻. Excluding cart weight

Item		OEM		Cart Transporter		Note
		37031-□□□□□	37041-□□□□□	37141-□□□□□	37161-□□□□□	
Mobility	Maximum speed	1800 mm/s	1350 mm/s	1350 mm/s	900 mm/s	
	Maximum rotation speed	180°/s	180°/s	100°/s		
	Stop position accuracy	± 100 mm: Position ✻ , ± 2°:Rotation				✻. ±10 mm: Position, ±0.5°: Rotation with option, (High Accuracy Positioning System)
Drive wheel	Materials	Non-marking Nylon foam-filled rubber, non-conductive				
	Size	200 dia. × 50mm nominal, 2 wheels				
Passive caster	Materials	Conductive thermoplastic rubber on Polyolefin				
	Size	75 dia. × 41 mm nominal, 4 casters				
Power	Battery	22-30 VDC				
	Capacity	72 Ah Battery cell nominal capacity				
	Run time	15 hours (continuous) approx.				With no payload condition
	Recharge Time	4 hours (5:1 ratio) approx.				
	Battery Life cycles	2000 recharge cycles (Battery cell nominal)				
	Charging method	Automatic / Manual				
	Auxiliary Power	5 VDC±5%, 1 A Switched Aux power 12 VDC±5%, 1 A Switched Aux power 20 VDC±5%, 1 A Switched Aux power 22-30 VDC, 4 A Switched × 2 22-30 VDC, 10 A Switched ✻ 22-30 VDC, 10 A Safe, Switched ✻				5, 12, 20, and 22-30 VDC power can be provided to external devices. ✻. 10 A Switched and 10 A Safe, Switched share the 10 A of current.
Standard	Safety Standard	EN1525 / JIS D6802 / ANSI B56.5				
	Wireless	IEEE 802.11 a/b/g				
Safety Features	Safety Scanning Laser	1 at front Class 1 PLd Safety per ISO13849-1 Maximum range: 15 m Field of view: 240°				
	Emergency Stop	1 at Operator panel		1 at HMI post touchscreen, 1 at Operator panel		
	Rear sonar	2 at rear, 2 m range				Each pairs is one emitter and one receiver, working together
	Front Bumper	1 at front of platform, 2pairs of sensors				
	Low Front Laser	1 at front of platform Class 1 Maximum range: 4 m Field of view: 270°				
	Side Laser	Option ✻		2 on horizontal tubes of HMI post Class 1 Maximum range: 4 m Field of view: 270°		✻. 2 on sides of payload structure, user-mounted
	Flash light	Light Disc in each side		Light Disc in each side, Beacon on HMI post		
	Speaker	3.5", 80 W max.				
Operator Interface	Screen / Touch panel	3.5 in. TFT 320 × 240 pixels, 256 K color screen		7.0 in. TFT LCD touch panel , 18/24 bit RGB		
	Button	ON Button: Green, OFF Button: Red, Brake-release button: Orange, Keyswitch (Disabled OFF Button)		ON Button: Green, OFF Button: Red, Brake-release button: Orange, Keyswitch (Disabled OFF Button), Latch Button, Unlatch Button		
User I/F	Wireless	IEEE 802.11 a/b/g				
	Ethernet port	1 × User LAN , 1 × Maintenance LAN, Auto-MDIX				
	Serial	RS-232 × 2, CAN Bus B × 1				
	Digital I/O	16 inputs, 16 outputs				
	Analog I/O	8 inputs (0 to 30 V), 4 outputs (0-20 V)				
	Audio	Digital Audio Out, Audio In / Audio Out				
Cart Latching	Latching method	Not available		Automatic		

MobilePlanner

Model	13495-200
Operating system	Windows 7 (32-bit/64 bit version) / Windows 8 (32-bit/64-bit version) / Windows 10 (32-bit/64-bit version)
CPU	1.5 GHz dual-core CPU recommended
Main memory	1.5 GB min. (4 GB min. recommended)
Hard disk	At least 200 MB of available space
Video memory	256 MB min.
Display	XGA 1024 × 768, 16 million colors
Communications ports	USB port (for license key)
Supported languages	Japanese, English

Enterprise Manager 1100

Model	11167-100
Dimensions- W × D × H	426.0 × 438.4 × 42.4 mm
Weight	6.8 kg
Mounting method	1U rack mount in a standard 19-inch equipment rack
Power Supply	100-240 VAC ✻
Power Consumption	200W max.
Operating Temperature	10 to 35 °C
Storage Temperature	-25 to 60 °C
Operating Humidity	8 to 90%, non-condensing
Storage Humidity	5 to 95%, non-condensing
Chassis protection class	IP20
CPU	Intel® Xeon® CPU
Main Memory	4 GB DDR3
Storage	32 GB SSD
Communication port	10/100/1000 Ethernet × 4, USB × 4, VGA

✻. typical 100 W

High Accuracy Positioning System

Model		13660-□00
Sensor	**Depth**	30 mm
	Width	160 mm
	Rating	IP64
	Environment	-40 to 85 °C
	LEDs	Power, Tape present, Left marker, Right marker
Magnetic Tape	**Width**	25 mm
	Orientation	South up
Markers (Magnetic Tape)	**Width**	25 mm
	Length	300 mm min. for 500 mm/s drive speed
	Orientation	North up
	Separation from tape	15 - 30 mm
Connections	**Front sensor**	RS232-1 (/dev/ttyUSB9) on the core
	Rear sensor	RS232-2 (/dev/ttyUSB10) on the core
	Power, both sensors	Aux Power, using the included splitter cable

Acuity Localization

Model	13700-□00
Field of View	140°
Power Input	12 VDC (±10%) supplied from platform, through power connector
Power Consumption	3.3 W maximum

Touchscreen

Model	13605-000
Touch Panel	PCAP touch sensor, 5 simultaneous touches, black bordered cover lens
TFT Display	TFT LCD panel, 18/24 bit RGB parallel interface. 7.0 in. WVGA - Wide Viewing Angles, 5-Touch
Backlight	Constant current LED supply
Power Input	5 VDC supplied through power connector
Power Consumption	6.5 W maximum

Call/Door Box

Model	13029-802
Dimensions- W × D × H	141.4 × 74.7 × 30 mm
Weight	190 g
Mounting method	Mount to the provided wall frame with four screws
Power Supply	12 VDC
Power Consumption	0.5 A, 6 W typical
WiFi	IEEE 802.11 a/b/g/n
Communication port	Ethernet
I/O	Input × 2, Output × 2 (30 VDC, 2 A max)

Battery

Model	18578-000
Run-time (no payload)	15 hours (continuous) approx.
Weight	19 kg
Voltage	22-30 VDC
Capacity	72 Ah (Battery cell nominal)
Recharge time	4 hours, approx.
Life time	2000 times 80% DOD (Battery cell nominal), 7 years, approx., 16 hrs/day, 5 days/wk 4 years, approx., 19/7 (full-time)

Docking Station

Model	12477-0□0
Current	8 A ✻1
Contacts	2
Power	100 to 240 VAC, 50 to 60 Hz
Power consumption	800 W
Humidity	5 to 95 % non-condensing
Temperature	5 to 40 °C
Dimensions- W × D × H	349 × 369 × 315 mm (495 × 495.5 × 317 mm) ✻2
Weight	8.2 kg
Mounting	Wall bracket, directly to floor, or on floor with floor plate
Indicators	Power on - blue Charging - yellow
Connector	For out-of-platform battery charging

✻1. Thermal fuse in AC power switch (10 A Time-lag fuse at switch for legacy dock)
✻2. ( ) for with Floor plate

Joystick

Model	13558-000
Weight	550 g
IP rating	IP56

Cart

Model	75020-000
Dimension (L × W × H)	592 × 846 × 480 mm
Weight	23 kg
Rating	ESP rated
Passive Casters	2 front, 2 rear, spring-loaded
Caster diameter	100 mm nominal
Caster Brakes	at 2 rear casters

Components and Functions

OEM

Operator Panel
Power ON/OFF, Emergency Stop, Brake Button with 3.5 inch color monitor

WiFi antenna
IEEE 802.11 a/b/g

Top Plate (Option)
Upper plate come with Starter Kit.
It is not necessary for building customer payload.

Rear Sonar
Obstacle sensor to detect rear side based on Sonar.

Safety Scanning Laser
Safety rated Laser using for SLAM (Simultaneous localization and mapping).
It is also used for safety functionality.

Light Discs
Status indicator. Located both side

Front Bumper
Stop when it hits obstacle

Low Front Laser
Obstacle sensor to detect low profile object in the forward direction.

Cart Transporter

Operator Panel
- 7” Color touchscreen. (Status, Goal input)
- WiFi antenna×2
- Emergency Stop
- Power ON/OFF
- Brake Button
- Latch/Unlatch buttons for Cart
- Beacon
- Acuity Localization (Option)

Rear-facing Laser
Obstacle laser scanner to detect rear side.

Side Laser
Obstacle laser scanner to detect vertically

Cart
Automatically latch/unlatched cart with manual break.
Latching/Unlatching can be controlled by Software.

OEM
OEM with Cart Latching plate

LD Series

System Configuration

OEM

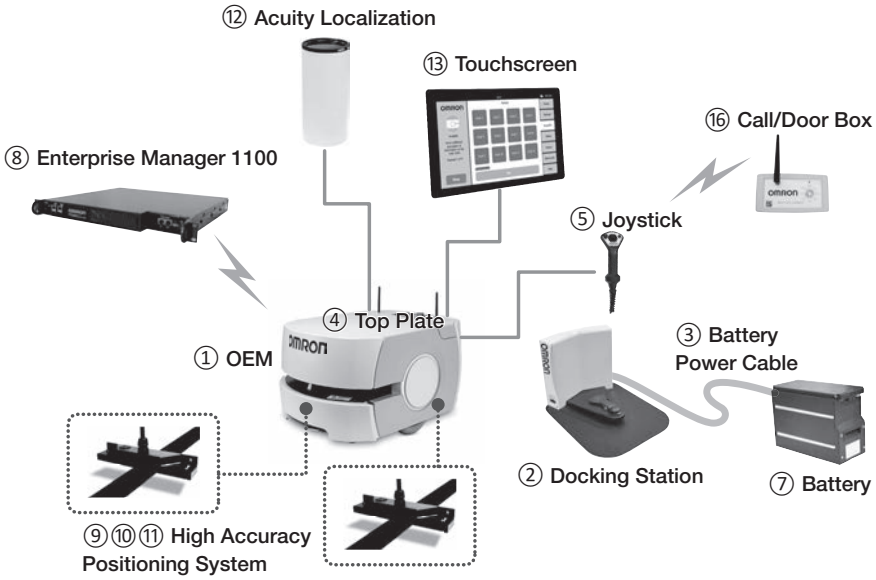

	Product Name	Model	Description	Docking Station kit/Starter kit
①	OEM	370□1-00000	A Mobile Robot OEM. The Battery is not included.	Included in Docking Station kit and Starter kit
②	Docking Station	12477-000	A docking station to charge the Battery installed in the Mobile Robot.	Included in Docking Station kit
③	Battery Power Cable	12676-000L	A cable to connect a Battery and Docking Station to charge the Battery outside of the Mobile Robot.	
④	Top Plate	12944-000	A upper plate of the Mobile Robot OEM. It is not necessary for building customer payload.	Included in Starter kit
⑤	Joystick	13558-000	Used for manually controlling the Mobile Robot.	
⑥	MobilePlanner	13495-200	PC software to configure, drive and observe the Mobile Robot, including a USB license dongle.	
⑦	Battery	18578-000	A Battery that is installed in the Mobile Robot.	-
⑧	Enterprise Manager 1100	11167-100	A system that manages a fleet of Mobile Robots, including a network appliance, software, and a USB license dongle.	-
⑨	High Accuracy Positioning System (Single sensor)	13660-100	A sensor and magnetic tape to achieve accurate alignment when the Mobile Robot follows driving forward. The sensor is attached to the Mobile Robot.	-
⑩	High Accuracy Positioning System (Double sensor)	13660-000	Two sensors and magnetic tape to achieve accurate alignment when the Mobile Robot follows driving both forward and backward. The sensors are attached to the Mobile Robot.	-
⑪	Magnetic tape	14925-000	Magnetic tape for the High Accuracy Positioning System. The tape is applied to signal the Mobile Robot where to stop.	-
⑫	Acuity Localization	13700-000	Used where process layout or obstacle location changes often. Installed on a payload structure attached to the Mobile Robot.	-
⑬	Touchscreen	13605-000	Allows operators to check the status of the Mobile Robot, enter goals, and pause the Mobile Robot. Installed on a payload structure attached to the Mobile Robot.	-
⑭	Side Laser Bundle	13456-000	Used to detect obstacles that are at heights the safety scanning laser of the Mobile Robot cannot detect. Installed on a payload structure attached to the Mobile Robot.	-
⑮	Side Laser Kit	13456-100	Includes the above mentioned Side Laser, mounting kit, and metal covers to protect from lasers.	-
⑯	Call/Door Box	13029-802	Used to issue a request for a Mobile Robot to go to the goal or to open a closed door. Installed at the goal or door to open.	-
⑰	Breakout Cable	14165-000	A D-SUB44 pin cable for digital I/O interface of the Mobile Robot.	-

Cart Transporter

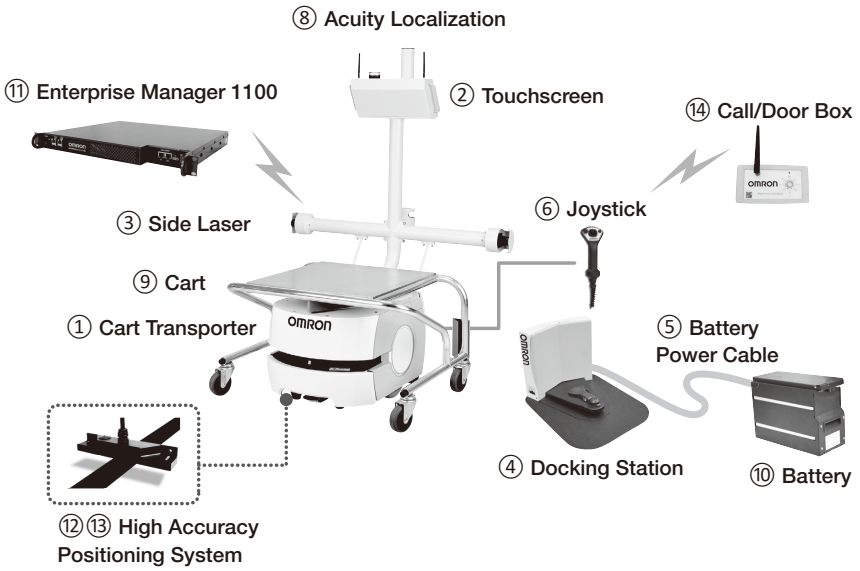

	Product Name	Model	Description	Docking Station kit/Starter kit
①	Cart Transporter	371□1-00000	A Mobile Robot Cart Transporter. The Battery is not included.	Included in Docking Station kit and Starter kit
②	Touchscreen	13605-000	Allows operators to check the status of the Mobile Robot, enter goals, and pause the Mobile Robot. Installed on a payload structure attached to the Mobile Robot.	
③	Side Laser	13456-000	Used to detect obstacles that are at heights the safety scanning laser of the Mobile Robot cannot detect. Installed on a payload structure attached to the Mobile Robot.	
④	Docking Station	12477-000	A docking station to charge the Battery installed in the Mobile Robot.	Included in Docking Station kit
⑤	Battery Power Cable	12676-000L	A cable to connect a Battery and Docking Station to charge the Battery outside of the Mobile Robot.	
⑥	Joystick	13558-000	Used for manually controlling the Mobile Robot.	Included in Starter kit
⑦	MobilePlanner	13495-200	PC software to configure, drive and observe the Mobile Robot, including a USB license dongle.	
⑧	Acuity Localization	13700-000	Used where process layout or obstacle location changes often. Installed on a payload structure attached to the Mobile Robot.	
⑨	Cart	75020-000	A cart designed for Mobile Robot Cart Transporter.	
⑩	Battery	18578-000	A Battery that is installed in the Mobile Robot.	-
⑪	Enterprise Manager 1100	11167-100	A system that manages a fleet of Mobile Robots, including a network appliance, software, and a USB license dongle.	-
⑫	High Accuracy Positioning System (Single sensor)	13660-100	A sensor and magnetic tape to achieve accurate alignment when the Mobile Robot follows driving forward. The sensors are attached to the Mobile Robot.	-
⑬	Magnetic tape	14925-000	Magnetic tape for the High Accuracy Positioning System. The tape is applied to signal the Mobile Robot where to stop.	-
⑭	Call/Door Box	13029-802	Used to issue a request for a Mobile Robot to go to the goal or to open a closed door. Installed at the goal or door to open.	-
⑮	Breakout Cable	14165-000	A D-SUB44 pin cable for digital I/O interface of the Mobile Robot.	-

Dimensions

CAD data can be downloaded from Omron Adept Technologies Inc. website.
http://www.adept.com/Robots-CAD-File

(Unit: mm)

Mobile Robots-LD Platform

OEM

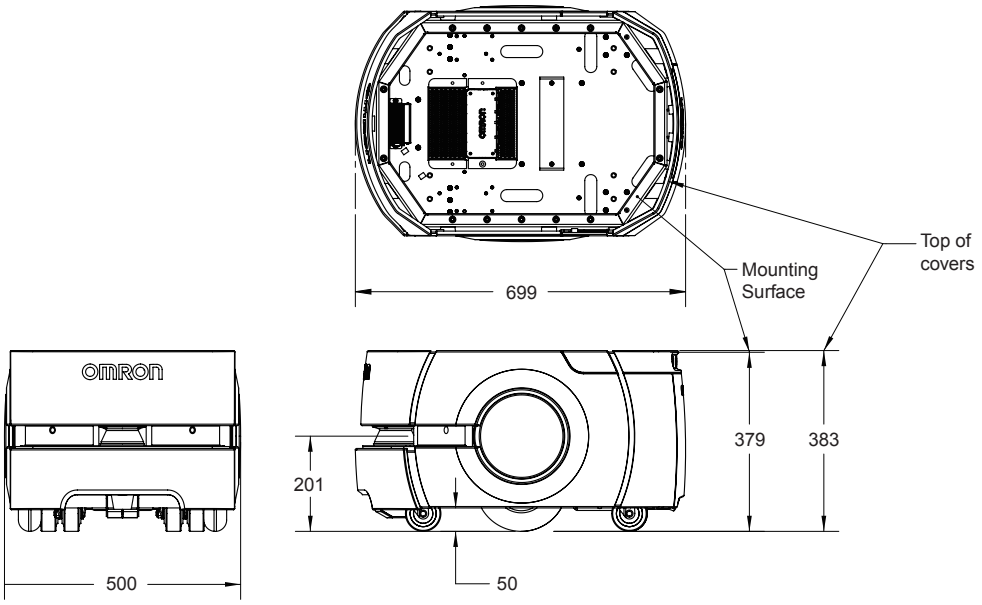

Cart Transporter

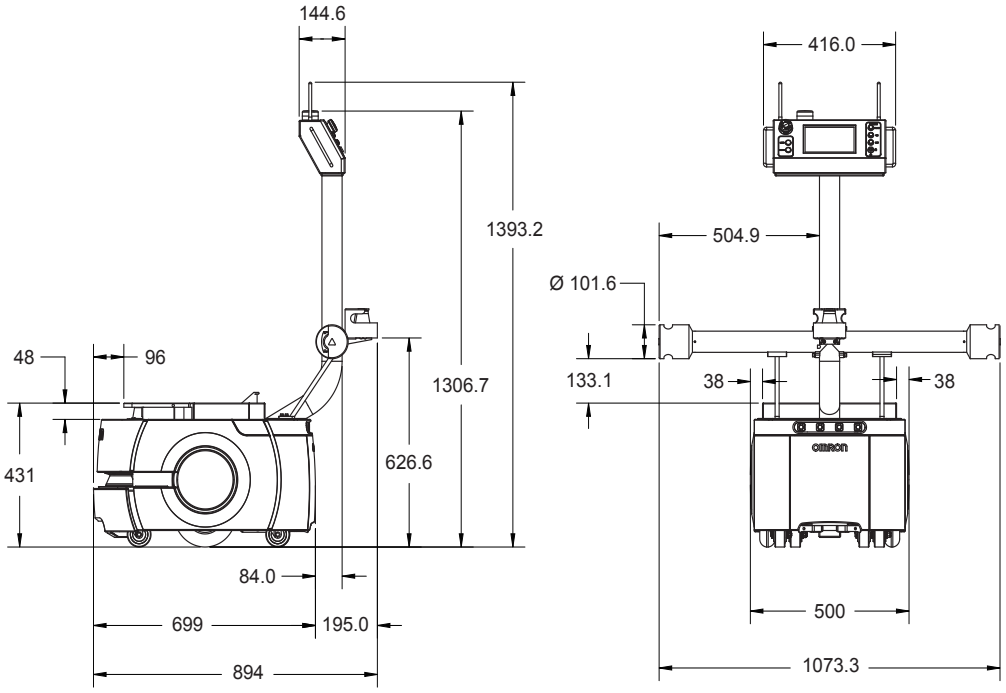

(Unit: mm)

Enterprise Manager 1100

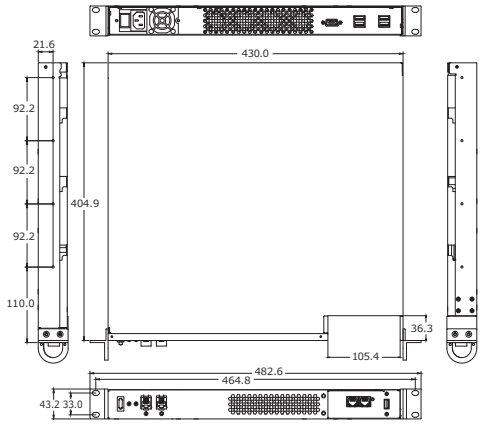

High Accuracy Positioning System

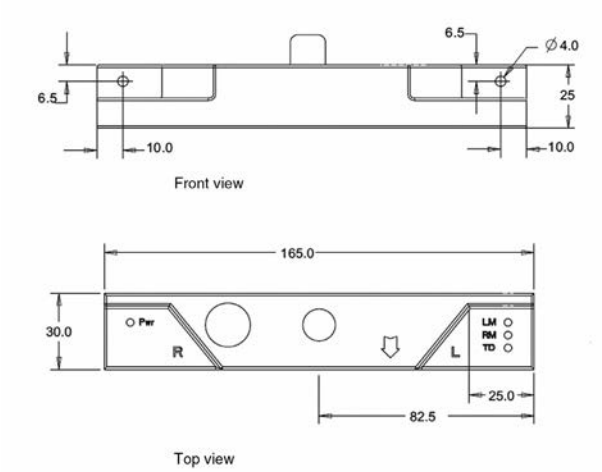

Acuity Localization

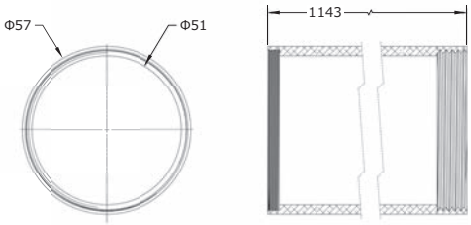

Touchscreen

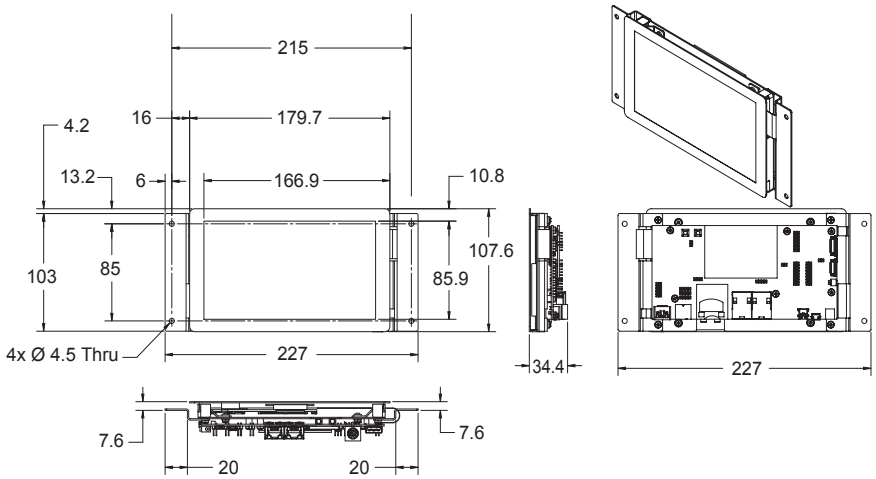

(Unit: mm)

Call/Door Box

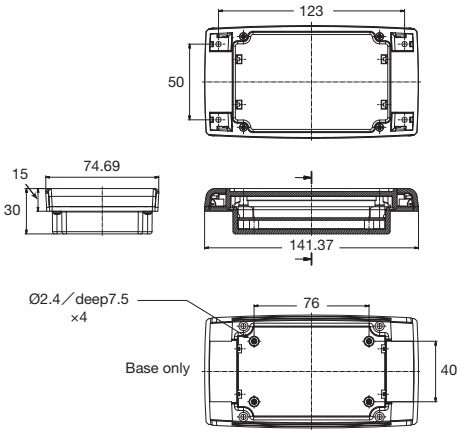

Docking Station

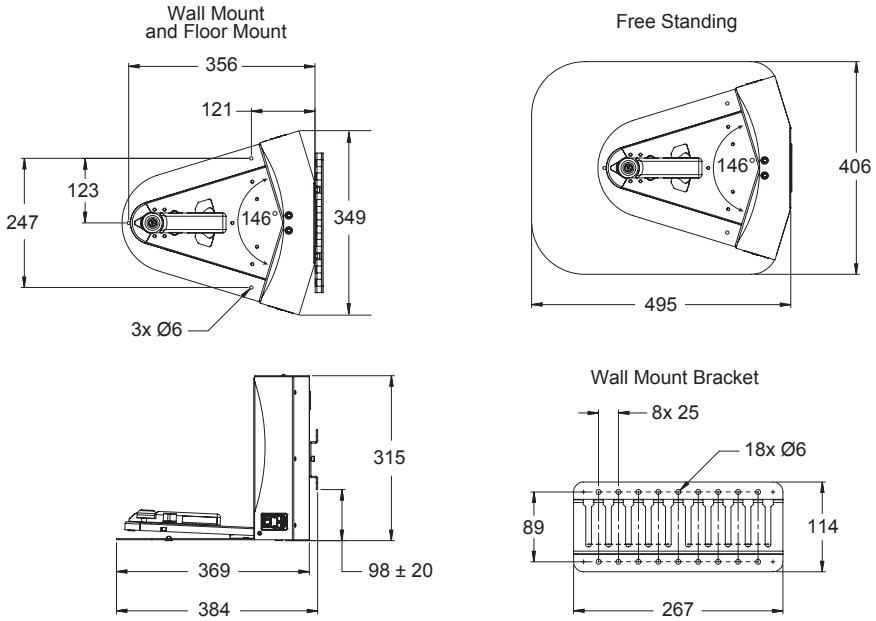

Joystick

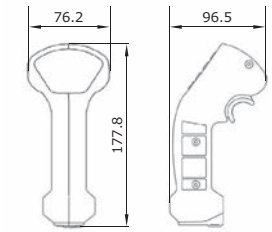

(Unit: mm)

Cart

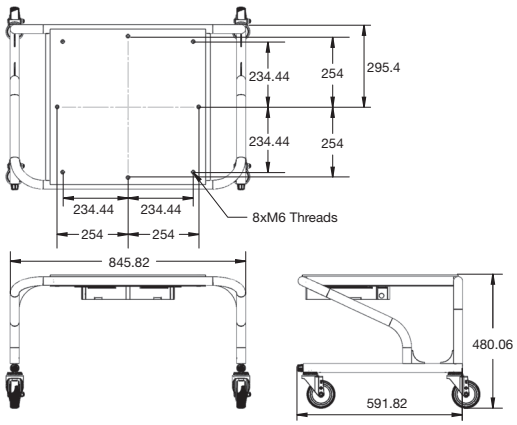

Related Manuals

Manual No.	English title
I611	Mobile Robots LD Platform User’s Guide
I612	Mobile Robots LD Cart Transporter User’s Guide
I613	Mobile Robots LD Platform Peripherals Guide
I614	Mobile Robots Software Suite User's Guide
I615	Enterprise Manager 1100 User’s Guide
I616	Mobile Robot Safety Guide
I617	Advanced Robotics Command Language Reference Guide
I618	Advanced Robotics Command Language Enterprise Manager Integration Guide

- Intel, Xeon and Intel Xeon are trademarks of Intel Corporation in the U.S. and/or other countries.
- Other company names and product names in this document are the trademarks or registered trademarks of their respective companies.
- The product photographs and figures that are used in this catalog may vary somewhat from the actual products.
- Microsoft product screen shot(s) reprinted with permission from Microsoft Corporation.

Terms and Conditions Agreement

Read and understand this catalog.

Please read and understand this catalog before purchasing the products. Please consult your OMRON representative if you have any questions or comments.

Warranties.

(a) Exclusive Warranty. Omron's exclusive warranty is that the Products will be free from defects in materials and workmanship for a period of twelve months from the date of sale by Omron (or such other period expressed in writing by Omron). Omron disclaims all other warranties, express or implied.

(b) Limitations. OMRON MAKES NO WARRANTY OR REPRESENTATION, EXPRESS OR IMPLIED, ABOUT NON-INFRINGEMENT, MERCHANTABILITY OR FITNESS FOR A PARTICULAR PURPOSE OF THE PRODUCTS. BUYER ACKNOWLEDGES THAT IT ALONE HAS DETERMINED THAT THE PRODUCTS WILL SUITABLY MEET THE REQUIREMENTS OF THEIR INTENDED USE.

Omron further disclaims all warranties and responsibility of any type for claims or expenses based on infringement by the Products or otherwise of any intellectual property right. (c) Buyer Remedy. Omron's sole obligation hereunder shall be, at Omron's election, to (i) replace (in the form originally shipped with Buyer responsible for labor charges for removal or replacement thereof) the non-complying Product, (ii) repair the non-complying Product, or (iii) repay or credit Buyer an amount equal to the purchase price of the non-complying Product; provided that in no event shall Omron be responsible for warranty, repair, indemnity or any other claims or expenses regarding the Products unless Omron's analysis confirms that the Products were properly handled, stored, installed and maintained and not subject to contamination, abuse, misuse or inappropriate modification. Return of any Products by Buyer must be approved in writing by Omron before shipment. Omron Companies shall not be liable for the suitability or unsuitability or the results from the use of Products in combination with any electrical or electronic components, circuits, system assemblies or any other materials or substances or environments. Any advice, recommendations or information given orally or in writing, are not to be construed as an amendment or addition to the above warranty.

See http://www.omron.com/global/ or contact your Omron representative for published information.

Limitation on Liability; Etc.

OMRON COMPANIES SHALL NOT BE LIABLE FOR SPECIAL, INDIRECT, INCIDENTAL, OR CONSEQUENTIAL DAMAGES, LOSS OF PROFITS OR PRODUCTION OR COMMERCIAL LOSS IN ANY WAY CONNECTED WITH THE PRODUCTS, WHETHER SUCH CLAIM IS BASED IN CONTRACT, WARRANTY, NEGLIGENCE OR STRICT LIABILITY.

Further, in no event shall liability of Omron Companies exceed the individual price of the Product on which liability is asserted.

Suitability of Use.

Omron Companies shall not be responsible for conformity with any standards, codes or regulations which apply to the combination of the Product in the Buyer's application or use of the Product. At Buyer's request, Omron will provide applicable third party certification documents identifying ratings and limitations of use which apply to the Product. This information by itself is not sufficient for a complete determination of the suitability of the Product in combination with the end product, machine, system, or other application or use. Buyer shall be solely responsible for determining appropriateness of the particular Product with respect to Buyer's application, product or system. Buyer shall take application responsibility in all cases.

NEVER USE THE PRODUCT FOR AN APPLICATION INVOLVING SERIOUS RISK TO LIFE OR PROPERTY OR IN LARGE QUANTITIES WITHOUT ENSURING THAT THE SYSTEM AS A WHOLE HAS BEEN DESIGNED TO ADDRESS THE RISKS, AND THAT THE OMRON PRODUCT(S) IS PROPERLY RATED AND INSTALLED FOR THE INTENDED USE WITHIN THE OVERALL EQUIPMENT OR SYSTEM.

Programmable Products.

Omron Companies shall not be responsible for the user's programming of a programmable Product, or any consequence thereof.

Performance Data.

Data presented in Omron Company websites, catalogs and other materials is provided as a guide for the user in determining suitability and does not constitute a warranty. It may represent the result of Omron's test conditions, and the user must correlate it to actual application requirements. Actual performance is subject to the Omron's Warranty and Limitations of Liability.

Change in Specifications.

Product specifications and accessories may be changed at any time based on improvements and other reasons. It is our practice to change part numbers when published ratings or features are changed, or when significant construction changes are made. However, some specifications of the Product may be changed without any notice. When in doubt, special part numbers may be assigned to fix or establish key specifications for your application. Please consult with your Omron's representative at any time to confirm actual specifications of purchased Product.

Errors and Omissions.

Information presented by Omron Companies has been checked and is believed to be accurate; however, no responsibility is assumed for clerical, typographical or proofreading errors or omissions.

Note: Do not use this document to operate the Unit.

OMRON Corporation **Industrial Automation Company**

Kyoto, JAPAN

Contact: www.ia.omron.com

Regional Headquarters

OMRON EUROPE B.V.
Wegalaan 67-69, 2132 JD Hoofddorp
The Netherlands
Tel: (31)2356-81-300/Fax: (31)2356-81-388

OMRON ASIA PACIFIC PTE. LTD.
No. 438A Alexandra Road # 05-05/08 (Lobby 2),
Alexandra Technopark,
Singapore 119967
Tel: (65) 6835-3011/Fax: (65) 6835-2711

OMRON ELECTRONICS LLC
2895 Greenspoint Parkway, Suite 200 Hoffman Estates,
IL 60169 U.S.A.
Tel: (1) 847-843-7900/Fax: (1) 847-843-7787

OMRON ADEPT TECHNOLOGIES, INC.
4550 Norris Canyon Road, Suite 150, San Ramon, CA 94583 U.S.A.
Tel: (1) 925-245-3400/Fax: (1) 925-960-0590

OMRON (CHINA) CO., LTD.
Room 2211, Bank of China Tower, 200 Yin Cheng Zhong Road,
PuDong New Area, Shanghai, 200120, China
Tel: (86) 21-5037-2222/Fax: (86) 21-5037-2200

Authorized Distributor:

© OMRON Corporation 2017 All Rights Reserved.
In the interest of product improvement,
specifications are subject to change without notice.

CSM_5_4_0318
Cat. No. I828-E1-02 0917(0117)